ROBO PARTY

Product Installation Manual

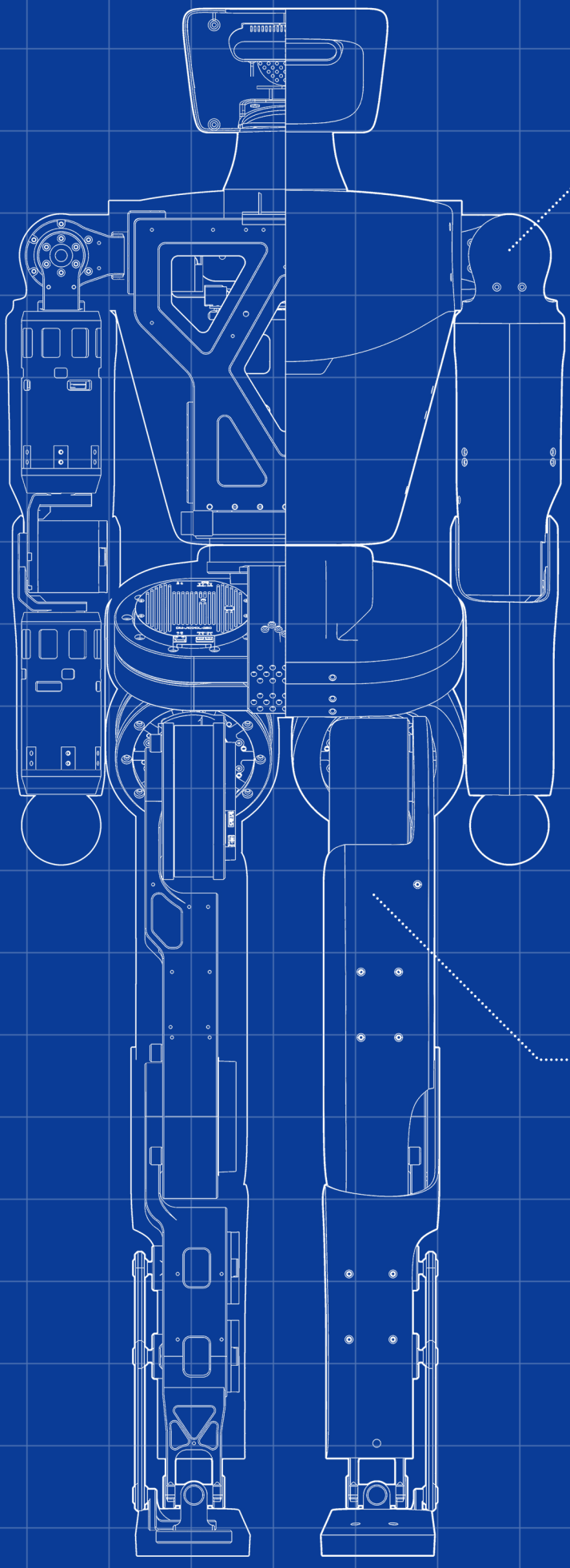

RoboParty

Roboto Origin

Shanghai RoboParty Technology Co., Ltd. roboparty.com

CONTENT

00 Product Precautions

01 Safety and Compliance Information

03 Assembly Precautions

05 Appendix 1: RoboParty Roboto Origin Parts List V1.1.3

08 Appendix 2: RoboParty Roboto Origin Prototype Safety Operation Guide V1.1.1

12 Appendix 3: RoboParty Roboto Origin Prototype Open Source License and Secondary Development Agreement V1.0.2

Video Installation Tutorial

01 Product Overview

15 Product Introduction

15 Basic Product Parameters

02 Installation Instructions

16 Body Components and Interfaces

17 Installation Steps

17 Leg Installation Instructions

22 Hip Joint Installation Instructions

26 Leg and Hip Connection Installation Instructions

27 Waist Installation Instructions

33 Arm Connection Installation Instructions

36 Cable Fastener Installation Instructions

37 Installation Instructions for Switches, Interfaces, etc.

41 Limit Pin Calibration

Safety and Compliance Information

To avoid illegal acts, possible injury, and loss, the following regulations must be observed:

1. Before using this product, please carefully read this document to understand your rights, responsibilities, and safety precautions. Failure to comply may result in property damage or safety hazards. By using this product, you acknowledge that you have fully read and accepted all terms of this document, and you agree to operate strictly in accordance with the specifications, taking full responsibility for your own actions and any resulting consequences.

2. This product is not a toy and is not recommended for use by individuals under the age of 18. Keep the product out of the reach of children, and exercise extra caution when operating in areas where children are present.

3. This product should not be used in crowded areas. During operation, ensure that a safe distance of at least 1 meter radius is maintained between the product and any persons. RoboParty shall not be held liable for any injury or loss caused to relevant personnel due to improper operation.

4. This product is designed for operation on the ground. Do not lift the device while it is in motion such that both legs are off the ground.

5. Do not use this product in extreme environments (e.g., high temperature, low temperature, corrosive chemicals, etc.). RoboParty shall not be held responsible for any device issues arising from such conditions.

6. Under normal use conditions, issues resulting from natural wear of components or battery aging shall not be considered product quality defects, and RoboParty assumes no liability for such issues.

7. This product is prohibited from being used in any activity that endangers national security, including but not limited to supporting terrorism, use near nuclear facilities, development of chemical or biological weapons, or design and use of weapons of mass destruction.

8. You confirm that you are not subject to any trade restrictions or sanctions; otherwise, you may not be able to use RoboParty's products and services normally.

9. RoboParty is committed to ensuring global compliance of its products. Please comply with all applicable laws and regulations in your region and pay attention to relevant compliance requirements.

10. You must comply with applicable export control laws and regulations in your jurisdiction.
11. You undertake to use this product for legitimate purposes and agree to accept all terms of this document.
12. To the extent permitted by local laws, RoboParty reserves the right of final interpretation of this agreement, which may be updated or adjusted as necessary.

Note: This manual is compiled based on the current RoboParty Roboto Origin version. Due to continuous product improvement (or rapid iteration of the open-source community), subsequent batch kits and documentation may be subject to minor changes. The latest version of the document can be found on the official website under "Service & Support". The right of final interpretation belongs to Shanghai RoboParty Technology Co., Ltd.

Assembly Precautions

1.Workbench Management

1.1 Zoned Placement:

Left side: Area for materials to be assembled (only materials required for the current process).

Middle: Work area (lay anti-static mat, keep clean).

Right side: Finished product / semi-finished product storage area.

1.2 Foreign Object Prevention:

It is strictly forbidden to place items unrelated to production on the workbench (e.g., mobile phones, water cups, keys) to prevent metal foreign objects from falling into the product and causing short circuits.

2. Personal Protective Equipment (PPE) Standards

Anti-static gloves: When touching all electronic components, circuit boards, and camera modules.

Nitrile gloves: When using chemicals such as lubricating grease, thermal grease, threadlocker, etc.

Hair/attire enforcement: Long hair must be tied up and tucked into a work cap; dangling jewelry (necklaces, bracelets) is strictly prohibited; cuffs must be tightened.

3. Core Safety Operating Procedures

3.1 Lithium Battery Safety Operation

This product uses a high-energy-density lithium battery pack. Improper operation can easily cause a fire.

Drop Disposal:

If any battery pack is dropped (height > 30 cm) or subjected to a severe impact, it is strictly prohibited to install or use it again. Immediately affix a red label reading "Awaiting Scrap/Observation" and move it to a designated explosion-proof safety cabinet or sandbox for isolated observation for 24 hours.

Short Circuit Prevention:

Before connecting the battery plug to the main board, the original factory protective cover or insulating tape must remain in place. Exposing the positive and negative terminals is strictly prohibited.

Do not use metal tweezers or screwdrivers to touch the battery connector while the system is powered on.

3.2 Mechanical Pinch Prevention and Operation

Power-off operation: Installation, adjustment, and replacement of joints must be performed with **the emergency stop pressed** and **the power disconnected**.

Manual rotation: Do not insert fingers into the **gaps** of moving joints or into **limit slots**, to prevent finger crushing or fracture caused by gravity-induced joint movement or inertia closure.

Screw fixing: When tightening flat head screws, avoid using excessive force to prevent stripping the threads.

3.3 Chemical Use Safety

Threadlocker: Apply only to the last 3–4 threads at the end of the screw. Do not allow excess to spill and contaminate plastic parts (some plastics may become brittle or crack when in contact with threadlocker).

Waste disposal: Cleaning wipes or cotton swabs contaminated with chemicals are **hazardous waste** and must be disposed of in designated yellow hazardous waste bins. Mixing with ordinary waste is strictly prohibited.

3.4 Emergency Response Procedure

When an abnormal situation occurs (smoke, fire, unusual noise, personal injury), strictly follow the **"Stop – Isolate – Report"** procedure.

Battery/Circuit Fire Response

Step 1: Immediately press the main power emergency stop button.

Step 2: Quickly evacuate to a safe distance (>3 meters) and loudly warn others.

Step 3: Small flames: Use a dry powder fire extinguisher. Do NOT use water.

Large fire: Immediately call the fire emergency number and evacuate the workshop.

Appendix 1: RoboParty Roboto Origin Parts List V1.1.3

Item	PartNo	Version	Category	Description	Quantity	MatlStd
1	/	MP Freeze Version	Bearings	Deep Groove Ball Bearing 130*165*18	1	GB/T 276-2013
2	/	MP Freeze Version		Radial Spherical Plain Bearing (G Series) 8	8	GB/T 9161-2001
3	/	MP Freeze Version		Thrust Needle Roller and Cage Assembly AXK6085	9	GB/T 4605-2003
4	/	MP Freeze Version		Universal Joint Cross Bearing 16×40	2	JIS G 4805
5	RB000152_02	MP Freeze Version	Structural	Arm 1	2	6061 AL
6	RB000153_02	MP Freeze Version		Arm 2	4	6061 AL
7	RB000154_02	MP Freeze Version		Arm 3	4	6061 AL
8	RB000155_01	MP Freeze Version		Arm 4	4	6061 AL
9	RB000156_01	MP Freeze Version		IMU Carrier Board	1	6061 AL
10	RB000157_01	MP Freeze Version		Side Cross Plate	2	6061 AL
11	RB000158_02	MP Freeze Version		Inner Thigh	2	6061 AL
12	RB000159_02	MP Freeze Version		Battery Bottom Cover	1	7075 AL
13	RB000160_02	MP Freeze Version		Shoulder	2	6061 AL
14	RB000161_01	MP Freeze Version		20cm Foot	2	6061 AL
15	RB000162_01	MP Freeze Version		Foot Bottom Linkage	2	45 Steel
16	RB000163_01	MP Freeze Version		Ankle Roll Connector	4	6061 AL
17	RB000164_01	MP Freeze Version		Hip Joint Mount	1	6061 AL
18	RB000166_02	MP Freeze Version		Output Flange Linkage	4	45 Steel
19	RB000167_03	MP Freeze Version		Universal Connector	4	6061 AL
20	RB000168_02	MP Freeze Version		Universal Connector Reamed Flange	4	6061 AL
21	RB000169_02	MP Freeze Version		Calf / Lower Leg	2	6061 AL
22	RB000170_02	MP Freeze Version		Rear Chest Plate	1	6061 AL
23	RB000171_01	MP Freeze Version		Front & Rear Chest Plates	1	6061 AL
24	RB000172_01	MP Freeze Version		Limit Pin	4	6061 AL
25	RB000173_01	MP Freeze Version		Calf Bearing Lock	4	6061 AL
26	RB000174_03	MP Freeze Version		Waist Support	1	7075 AL
27	RB000175_02	MP Freeze Version		Long Linkage	2	45 Steel
28	RB000176_02	MP Freeze Version		Short Linkage	2	45 Steel
29	RB000177_02	MP Freeze Version		Hip Plate	2	6061 Aluminum Alloy
30	RB000179_01	MP Freeze Version		Arm 5	2	6061 Aluminum Alloy
31	/	MP Freeze Version		Rubber Foot Pad	2	Rubber
32	RBW_Origin_01	MP Freeze Version	Cables	RBW_Origin_01 Arm01	2	XT30(+2)-F.G.B-XT30(+2)-F.G.B
33	RBW_Origin_02	MP Freeze Version		RBW_Origin_02 Arm02	2	XT30(+2)-F.G.B-XT30(+2) -F.G.B
34	RBW_Origin_03	MP Freeze Version		RBW_Origin_03 Arm03	2	XT30(+2)-F.G.B-XT30(+2)-F.G.B
35	RBW_Origin_04	MP Freeze Version		RBW_Origin_04 Arm04	2	XT30(+2)-F.G.B-XT30(+2)-F.G.B
36	RBW_Origin_05	MP Freeze Version		RBW_Origin_05 Leg01	2	XT30U-F to XT30U-F (GH1.25 2pin Reversed Pinout 35cm)
37	RBW_Origin_06	MP Freeze Version		RBW_Origin_06 Leg02	2	XT30U-F to XT30U-F (GH1.25 2pin Reversed Pinout 35cm)
38	RBW_Origin_07	MP Freeze Version		RBW_Origin_07 Leg03	2	XT30U-F to XT30U-F (GH1.25 2pin Reversed Pinout 30cm)
39	RBW_Origin_08	MP Freeze Version		RBW_Origin_08 Leg04	2	XT30U-F to XT30(+2)-F.G.B (GH1.25 2pin Reversed Pinout 35cm)
40	RBW_Origin_09	MP Freeze Version		RBW_Origin_09 Leg05	2	XT30(+2)-F.G.B-XT30(+2)-F.G.B 10cm
41	RBW_Origin_10	MP Freeze Version		RBW_Origin_10 Body01	1	XT30U-F to XT30U-F (GH1.25 2pin Reversed Pinout 30cm)
42	RBW_Origin_11	MP Freeze Version		RBW_Origin_11 Body02	2	XT30(+2)-F.G.B-XT30(+2)-F.G.B
43	RBW_Origin_12	MP Freeze Version		RBW_Origin_12 Body03	1	XT30(+2)-F.G.B to XT30U-F (GH1.25 2pin Reversed Pinout 65cm)
44	RBW_Origin_13	MP Freeze Version		RBW_Origin_13 Body04	1	XT30(+2)-F.G.B to XT30U-F (GH1.25 2pin Reversed Pinout 55cm)
45	RBW_Origin_14	MP Freeze Version		usb to typec 3.0 30cm	1	30cm
46	RBW_Origin_15	MP Freeze Version		Type-C to Type-C, Flexible, Fast Charge, Right-Angle	1	30cm
47	/	MP Freeze Version		RDK Debugging Cable	1	1m

48	RBE_Origin_09	MP Freeze Version	IMU	CHAOHE HI14M0-USB IMU/VRU USB-232 w/ Cable	1	HIPNUC
49	ROBOTO-34	MP Freeze Version		RDK X5 8G	1	8G / Single Board
50	ROBOTO-35	MP Freeze Version		RTC	1	/
51	ROBOTO-36	MP Freeze Version		SD Card	1	SanDisk 32GB High-Speed
52	/	MP Freeze Version		Antenna	1	15cm Cable, IPEX Gen 1
53	/	MP Freeze Version		Heatsink Kit	1	/
54	RBE_Origin_04	MP Freeze Version		RBE_Board_v2.0	1	Custom 3-in-1 PCB
55	RBE_Origin_06	MP Freeze Version		Emergency Stop Button (E-Stop)	1	LANBO M3 Oxidized Head - Unilluminated 22mm
56	RBE_Origin_07	MP Freeze Version		Metal Push Button Switch	1	5V Green Ring LED, Wired Plug-in, Latching 16mm
57	RBE_Origin_08	MP Freeze Version		Digital Voltmeter	1	/
58	RBE_Origin_12	MP Freeze Version		Gamepad / Controller	1	Gamepad
59	RBE_Origin_13	MP Freeze Version		Cable Tie Mount	1	/
60	RBE_Origin_14	MP Freeze Version		Metal Handle	1	/
61	/	MP Freeze Version		Hexagon Socket Head Cap Screw M2.5×8	20	Grade 12.9 Alloy Steel
62	/	MP Freeze Version		Hexagon Socket Head Cap Screw M3×6	20	Grade 12.9 Alloy Steel
63	/	MP Freeze Version		Hexagon Socket Head Cap Screw M3×8	80	Grade 12.9 Alloy Steel
64	/	MP Freeze Version		Hexagon Socket Head Cap Screw M3×10	80	Grade 12.9 Alloy Steel
65	/	MP Freeze Version		Hexagon Socket Head Cap Screw M3×12	50	Grade 12.9 Alloy Steel
66	/	MP Freeze Version		Hexagon Socket Head Cap Screw M3×16	80	Grade 12.9 Alloy Steel
67	/	MP Freeze Version		Hexagon Socket Head Cap Screw M4×8	200	Grade 12.9 Alloy Steel
68	/	MP Freeze Version		Hexagon Socket Head Cap Screw M4×10	100	Grade 12.9 Alloy Steel
69	/	MP Freeze Version		Hexagon Socket Head Cap Screw M4×12	100	Grade 12.9 Alloy Steel
70	/	MP Freeze Version		Hexagon Socket Head Cap Screw M4×14	20	Grade 12.9 Alloy Steel

71	/	MP Freeze Version	Fasteners	Hexagon Socket Head Cap Screw M5×10	80	Grade 12.9 Alloy Steel
72	/	MP Freeze Version		Hexagon Socket Head Cap Screw M5×12	100	Grade 12.9 Alloy Steel
73	/	MP Freeze Version		Hexagon Socket Head Cap Screw M5×14	100	Grade 12.9 Alloy Steel
74	/	MP Freeze Version		Hexagon Socket Head Cap Screw M6×16	2	Grade 12.9 Alloy Steel
75	/	MP Freeze Version		Cylindrical Pin 4x18	30	304 Stainless Steel
76	/	MP Freeze Version		Cylindrical Pin 4x22	30	304 Stainless Steel
77	/	MP Freeze Version		Hexagon Socket Head Cap Screw M6×12	2	Grade 12.9 Alloy Steel
78	/	MP Freeze Version		Flat Head Screw M4×12	20	304 Stainless Steel
79	/	MP Freeze Version		Flat Head Screw M5×16	20	304 Stainless Steel
80	/	MP Freeze Version		Flat Head Screw M4×8	20	304 Stainless Steel
81	/	MP Freeze Version		Brass Standoff M3*15+3	10	Brass
82	/	MP Freeze Version		Eyebolt M4	4	304 Stainless Steel
83	RBE_Origin_10	MP Freeze Version	Battery	48V 15Ah Li-ion Battery	1	140*140*115mm Fuxiaoer
84	RBE_Origin_11	MP Freeze Version		Li-ion Battery Charger	1	3-pin Aviation Connector
85	RBM_Origin_01	MP Freeze Version	Actuators	DM 4340P（48V）	14	/
86	RBM_Origin_02	MP Freeze Version		DM 10010L （48V）	9	/
87	RBM_Origin_03	MP Freeze Version		DMFDCAN Analyzer	1	/

Note: The current manual is compiled based on the existing RoboParty Roboto Origin version. Due to continuous product improvement (or rapid iteration of the open-source community), subsequent batch kits and documentation may be subject to minor adjustments. The latest version of the document can be found on the official website under "Service & Support." The right of final interpretation belongs to Shanghai RoboParty Technology Co., Ltd.

Appendix 2: RoboParty Roboto Origin Safety Operation Guide V1.1.1

Document Version: V1.1.1

Effective Date: March 16, 2026

Target Audience: Personnel involved in the assembly, commissioning, and algorithm deployment of the roboto_origin

Pre-reading: Before operation, please ensure that you have read and signed the <RoboParty Roboto Origin Prototype Product Disclaimer and Safety Notice>.

Reference Resources: For detailed key mappings and code explanations, please refer to the official documentation website and the official GitHub repository.

Official Documentation Website: https://roboparty.com/roboto_origin/doc

Official Github Repository: https://github.com/Roboparty/roboto_origin

Core Warnings

High Dynamic Risk: The robot has an extremely high risk of instability and toppling during gait debugging. Any suspension zeroing or gait inference test, **must** be conducted in a controlled area equipped with a load-bearing safety hanger (fall protection).

Physical Emergency Stop Takes Precedence: In case of any uncontrollable joint jitter, gait deviation, or structural interference, please immediately press the **"X"** button on the remote control handle to trigger software disablement; if the software malfunctions, please immediately press the physical emergency stop switchw to cut off the main power supply.

1. Pre-power-on physical environment and hardware pre-check (must be done before power-on)

Before powering the main control and drive system, the operator must complete the following verifications:

1.1 Power Supply and Battery Verification

Voltage Threshold Check: Check the current voltage of the battery pack. **When the battery voltage is below 50V, please charge it immediately.** It is strictly prohibited to operate in an undervoltage state; otherwise, undervoltage protection will be triggered, causing abnormal behavior or sudden power failure and falling during the

robot's operation.

1.2 Mechanical Structure Verification

Key fastener inspection: Focus on checking **the fastening status of the ankle link**. If the ankle link is loose or fails to reach the specified torque, it will directly lead to abnormal ankle force exertion, and the robot will be unable to stand normally during the inference phase and may damage structural components.

1.3 Communication Link Verification

Handle Status Check: Check the remote control handle, press the home button to pair and connect the handle with the receiver, and ensure that the handle mode is in **"Xinput"** mode at this time, so as to ensure normal communication between the handle and the robot.

2. Status Enable and Zero Position Initialization (High-Risk Operation Phase)

This stage involves the instantaneous output of motor torque and position closed-loop control, **and must be carried out with the robot suspended using a safety hanger.**

2.1 Status Enable

Initial state confirmation: After the robot's main power is turned on, the status indicator lights of all motors on the body should default to be **red** (disabled state).

Motor Enable: Press the **"X" button** on the remote control, and the system will issue an enable command. At this time, visually check whether the indicator lights of all motors on the body have turned **green**.

Disable Test: Before the formal operation, it is recommended to press the "X" key again to test whether the disable function is normal (the indicator light switches back to red), and re-enable it after confirmation.

2.2 Zero Deviation Verificatio

Pre-adjustment of posture: After the motor is enabled, the motor can be manually adjusted to make the robot's posture similar to that at joint_default_angle, preventing sudden movements and damage to the motor and structural components.

Terminal Verification: After the adjustment is completed, you can use the following commands to check the deviation between the current joint angle and the zero point. Connect to the main controller using a network cable and create two new terminals on the main controller.

First, enter the following command in the first terminal to subscribe to the joint

pose topic:

```
source /opt/ros/humble/setup.bash
ros2 topic echo /joint_states
```

Then enter the following in another terminal:

```
source /opt/ros/humble/setup.bash
ros2 service call /refresh_joints std_srvs/srv/Trigger
ros2 service call /read_joints std_srvs/srv/Trigger
```

Calibration Judgment: Wait a moment. The first terminal will print out the deviation between the current joint angle and the zero point. If the deviations are all around joint_default_angle, the reset operation can be performed. If the deviations are large, please check whether the motor has been zeroed or whether the zeroing operation is correct. **Pay special attention to the calibration direction when using the limit block to calibrate the waist yaw joint, which should be that the upper body rotates counterclockwise to the limit block while the lower body remains stationary.**

2.3 Specification for Floating Reset Operation

Precondition for zero calibration: Before performing the Reset action, it must be confirmed that all motors have completed absolute zero calibration. **Do not perform the reset operation before the motors are zero calibrated! It is recommended to perform the reset operation using the hanger in the air.**

Pose Matching: When pressing the **"A" button** on the controller to perform Reset (return the motor to the preset zero position), the operator needs to manually intervene with the robot's limbs, **ensuring that the robot's current physical pose is as close as possible to the set Reset zero position pose.**

Position mutation warning: If the physical attitude deviates too much from the zero position, a large step response (motion mutation) will occur instantaneously during Reset, which can easily damage the motor reducer and structural components.

3. Model Inference and Dynamic Operation (Physical Machine Deployment Phase)

After confirming that the Reset is completed, the joint state is stable, and there is no abnormal current noise, enter the inference state according to the following specifications:

3.1 Landing and Pose Preparation

Smooth Landing: After Reset is completed, lower the robot smoothly from the safety hanger. The operator shall observe and confirm that both feet are fully on the ground and the center of gravity is evenly distributed.

3.2 Joystick Dead Zone Elimination

Instruction Clearance: Before pressing "B" for inference, be sure to manually move the left and right joysticks through their full range of motion and press the "LT" and "RT" buttons several times. This operation is used to eliminate the dead zone or drift of the hardware joysticks, **preventing residual instructions from causing the robot to unexpectedly drift or sprint at the moment inference starts.**

3.3 Node Status Monitoring and Inference Initiation

Background Status Confirmation: The operator must use the screen -r inference_node command on the host computer terminal to check the running status of the inference node. Only after confirming that there are no Error reports can the next step be taken.

Start inference: Press the **"B" button** on the remote control to officially enter the model inference state. At this time, the supervisor needs to closely monitor the robot's gait, hold the hanger control rope, or be ready to press the "X" button at any time.

4. Anomaly troubleshooting and emergency response

During the full lifecycle of operation, in case of emergencies, please handle them according to the following logic:

One-key Disable (Emergency Stop): If any abnormal behavior (such as high-frequency oscillation, joint overspeed, instability and toppling) occurs during the robot's reasoning process, please **immediately press the "X" key** to cut off the motor enable.

Abnormal disconnection troubleshooting: If the robot experiences a non-human-triggered "sudden incapacitation" (collapsing to the ground) during inference, please maintain the scene as it is and immediately use screen -r inference_node to enter the terminal and check the error message. Common causes include:The algorithm layer has triggered the set safety limits (such as joint overrun, speed overrun). The hardware layer has triggered overload, overheat, or under-voltage protection.

Log Retention: Before disconnecting the main power supply, it is recommended to export the Error log from the terminal first, so that the R&D team can locate the root cause of the problem.

5. Supplementary Instructions for Operation

For details on the functions and operations of each button, please refer to:atom01_deploy_README.

Appendix 3: RoboParty Roboto Origin Open Source License and Secondary Development Agreement V1.0.2

Version Number: V1.0.2
Effective Date: March 17, 2026
Official open-source repository: https://github.com/Roboparty/roboto_origin
Official Documentation Support: https://roboparty.com/roboto_origin/doc
Applicable to: All individuals or organizations that download, clone, modify, compile, run the code in this repository, or conduct secondary development.

1. Core Principles and General Statement

RoboParty adheres to the open and sharing geek spirit, and has open-sourced the underlying control framework, motion control algorithms, and related toolchains of the RoboParty Roboto Origin prototype. This agreement aims to objectively define the intellectual property boundaries of the open-source code, the open-source obligations of users, and the risk responsibilities for software-hardware decoupling during the secondary development process. Downloading or using the code in this repository signifies that you understand and accept all the terms of this agreement.

2. Open Source Licensing and Compliance Obligations (Based on GPL License)

The core source code of this project is open source under the **GPL V3 (GNU General Public License Version 3)** license. When users exercise the freedoms granted by open source, they must strictly fulfill the following legal obligations:

Free Use and Modification: You have the right to freely download, read, compile, and modify the source code of this repository for scientific research, education, commercial, or personal purposes.

Contagious Open Source Obligation (Copyleft): If you modify, derive from the code in this repository, and **distribute or sell to a third party** a program or physical robot that includes the modified code, you **must** make the modified source code publicly available under the same GPL license.

Attribution Statement Requirements: In any version of secondary development or distribution, the copyright notice, license statement, and RoboParty author information in the original code must be retained and shall not be concealed or deleted.

3. Intellectual Property and Trademark Boundaries

Isolation of code and brand: The GPL license only authorizes the use of source code. RoboParty, "RoboParty Roboto", and their related logos and graphic marks are all registered trademarks or commercial marks of Shanghai Luobo Party Technology Co., Ltd.

Restricted Use: Without written authorization from RoboParty, users shall not use the above trademarks for endorsement, naming, or implying official cooperation in derivative software, hardware products, or promotional materials developed through secondary development, so as to avoid misleading the public.

4. Secondary Development Risk Notice and Exemption from Liability for "Hardware-Software Decoupling" (Core Engineering Provisions)

Humanoid robots are complex mechatronic software-hardware strongly coupled systems. RoboParty is only responsible for the quality of hardware components in the factory state, **and the operational consequences of open source code and physical hardware are strictly decoupled.**

Self-responsibility for secondary development risks: Any user-initiated modification of control algorithms, inference models, joint limit strategies, or underlying driver firmware (including but not limited to adjusting PID gains, modifying gait planning, changing communication frequency, etc.) is considered a secondary development activity. **RoboParty shall not assume any warranty liability or economic compensation for any physical world damage (such as motor overloading and burning, link interference and breakage, reducer tooth sweeping, secondary injuries caused by robot instability and falling) resulting from such activities.**

Prerequisite for Forced Simulation: We strongly recommend and require that before deploying any modified code to a physical prototype, it must be fully verified in the simulation environment (Simulation), and ensure that the emergency stop (E-Stop) logic at the software layer and the current-limiting and position-limiting protection mechanisms at the hardware layer remain effective at all times.

Deployment Operation Specification: The actual machine deployment of secondary development code must strictly follow the <RoboParty Roboto Origin Product Installation Manual>, with zeroing in suspension and equipped with a safety hanger.

5. "AS-IS" Provision and Disclaimer of Warranty

No Warranty Statement: The code, models, scripts, and documentation within this open-source repository are provided "as is". RoboParty makes no express or implied warranties, including but not limited to warranties of merchantability, fitness

for a particular purpose, non-infringement, or the absence of bugs in the code.

Continuous Maintenance Disclaimer: RoboParty will iterate on the open-source repository based on R&D progress, but does not commit to providing free technical support, bug fixes, or updates tailored to specific user hardware within a specific period.

6. Effectiveness and Termination of the Agreement

If a user seriously violates this Agreement (such as refusing to fulfill the open source obligations under the GPL, or abusing trademarks), RoboParty has the right to terminate the open source license granted to the user and reserve the right to pursue legal liability.

Even if the authorization terminates, the relevant provisions of this Agreement regarding "Risk Notice and Disclaimer" and "Warranty Disclaimer" shall still have legal effect.

1 Product Overview

1.1 Product Introduction

RoboParty Roboto Origin (hereinafter referred to as Roboto Origin) is a humanoid robot platform designed for research, education, and certain exhibition scenarios. Its most notable features are full open-source availability and a modular design. The entire hardware system follows a highly modular structural philosophy, making joint assembly simple and keeping maintenance and upgrade costs extremely low. This makes it ideal for frequent teaching experiments and engineering validation. The robot stands 1.25 meters tall with a compact structure, facilitating debugging and operation within laboratory environments. While maintaining functional integrity, Roboto Origin continuously undergoes topological optimization of mass and weight to enhance overall performance. The main structural components are machined using 3-axis CNC, while the exterior parts are rapidly prototyped via 3D printing, significantly improving assembly efficiency and manufacturing accessibility. The outer material is made of rubber, which not only enhances the friendly feel during human-robot interaction but also improves impact resistance and operational safety. As a fully open-source robot platform, Roboto Origin aims to lower the barrier to R&D and promote the widespread application of robotics in teaching, research, and creative practice.

1.2 Basic Product Parameters

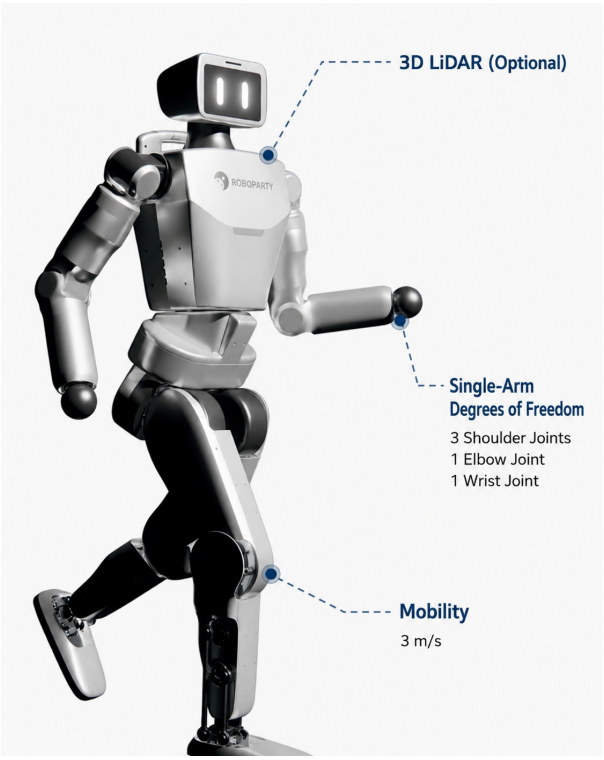

Structural Parameters	
Height	1.25 m
Degrees of Freedom	23
Weight	34 kg
Thigh Length	250 mm
Lower Leg Length	300 mm
Total Single-Arm Length	440 mm
Power & Energy	
Mobility	3 m/s
Peak Joint Torque	120 N·m
Battery Capacity	48 V, 15 Ah
Battery Life	Over 2 hours
Perception System	
Intel D435i Depth Camera (Optional)	
3D LiDAR (Optional)	

2 Installation Instructions

2.1 Pre-installation Requirements

Damiao Motor Debugging Documentation

Motor Installation Precautions:

1.Before starting assembly, assign IDs to all motors and perform encoder calibration according to the motor ID layout shown in the figure below.

2.Do not strike the motor with excessive force to prevent damage to internal components.

3.If the rotor becomes stuck after tightening, first check whether the set screw has not been fully backed out. If the issue is due to manufacturing tolerances, replace the screw at the corresponding position with a screw of the same specification that is 2 mm shorter.

For detailed calibration procedures, please refer to the accompanying document **Damiao Motor Debugging Documentation.**

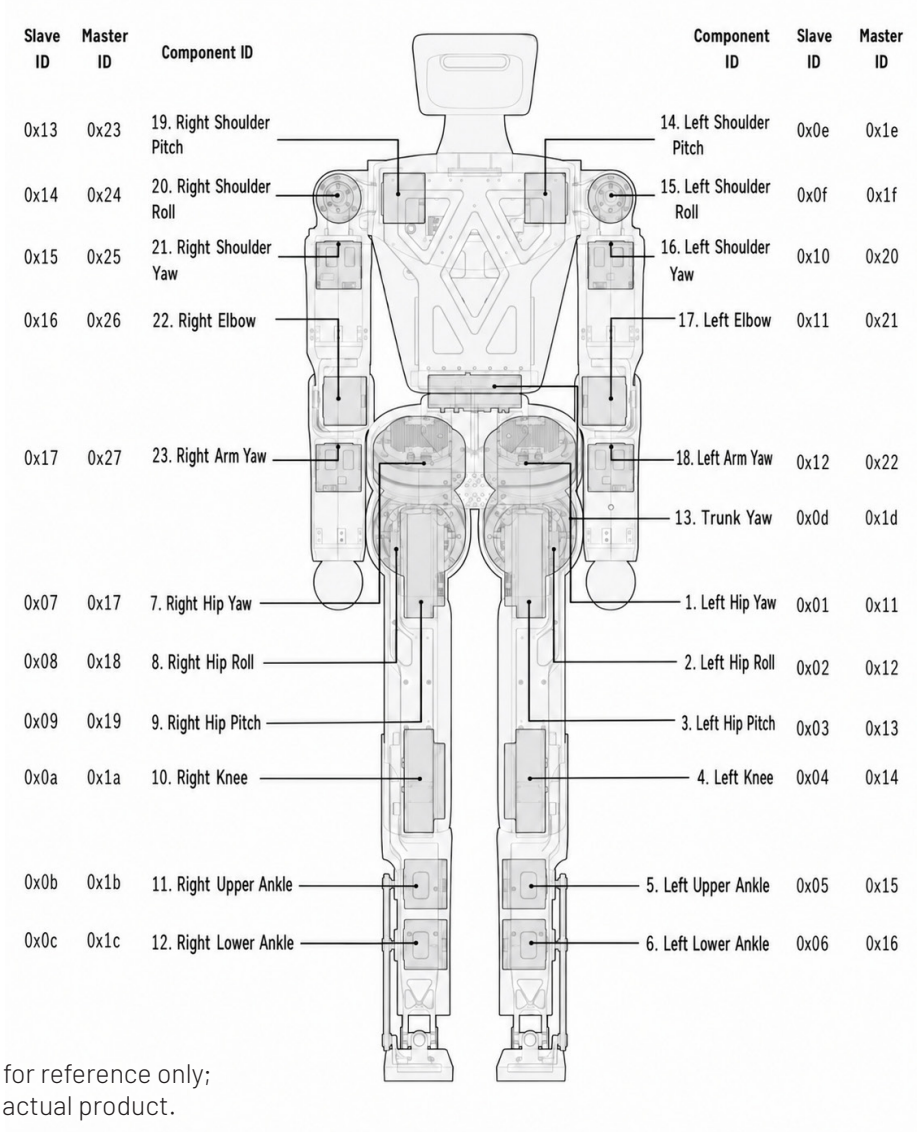

Note: Pictures are for reference only; please refer to the actual product.

2.2 Installation Steps

Leg Installation Instructions

STEP 1

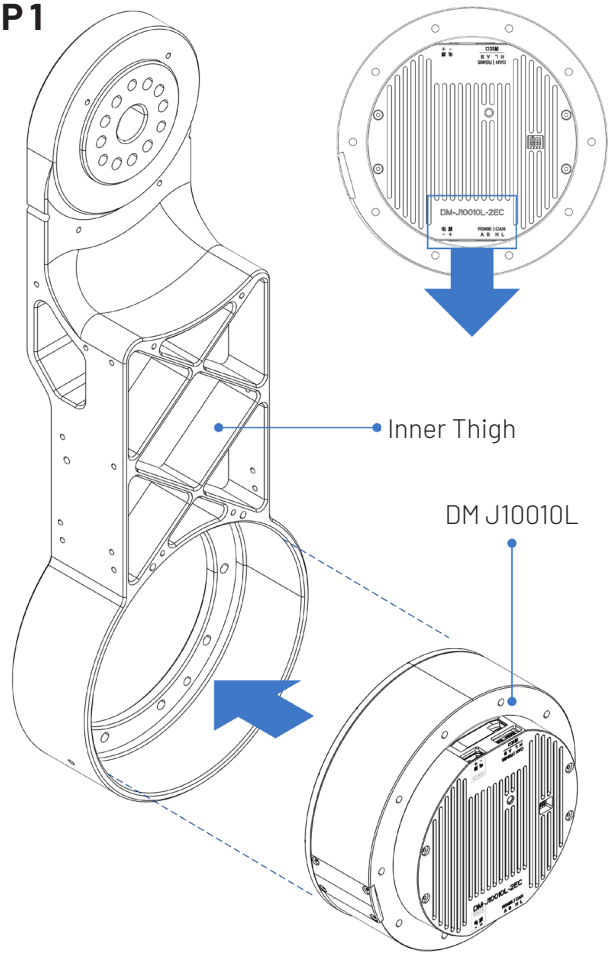

1 Place the components and motors according to the robot's standing orientation. Ensure that the motor interface faces the vertical direction (to avoid misalignment), and that the end bearing the label "DM-J10010L-2EC" is oriented downward.

STEP 2-3

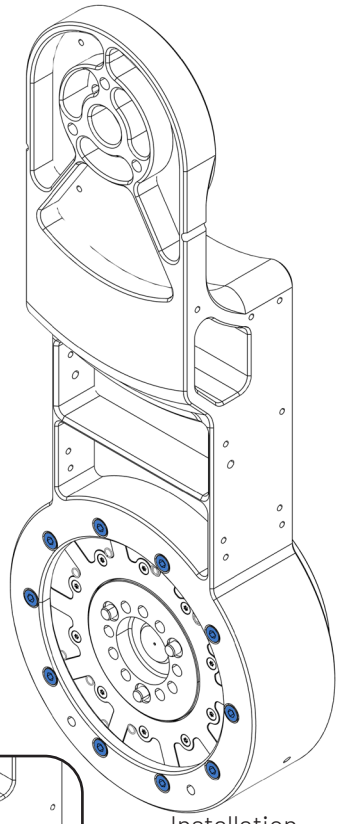

Installation Completed Effect Diagram

STEP 2-1

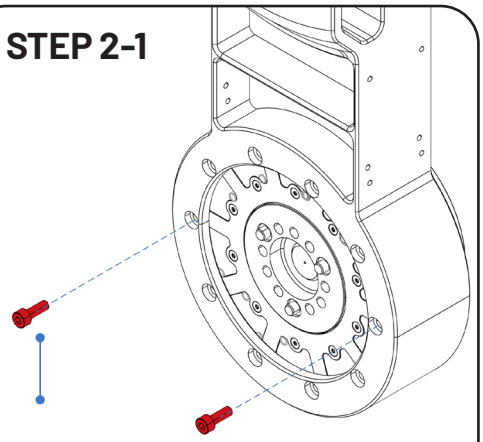

M4×12 Socket Head Cap Screws – used for positioning. Subsequently, the positioning screw must be unscrewed (backed out).

STEP 2-2

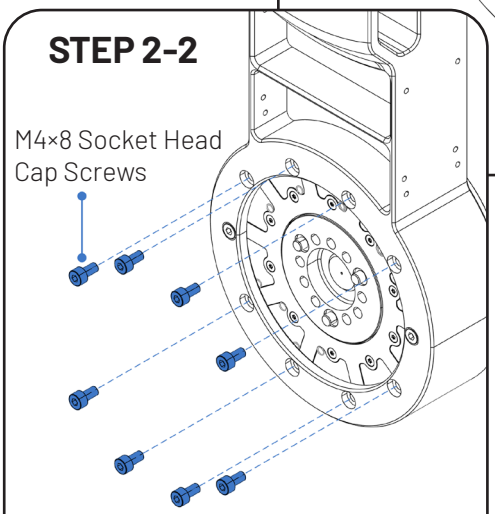

2 First, use M4×12 socket head screws for hole positioning. Insert M4×8 socket head screws into the remaining holes and tighten them using the diagonal method. Then remove the two M4×12 positioning screws and replace them with M4×8 socket head screws. Apply threadlocker when installing the screws. **For precautions, refer to section 3.3 of the Assembly Precautions.**

Note: Screws marked in red are for positioning purposes only and are not load-bearing fasteners. When tightening, only a slight contact feel is needed. Do not use power tools to over-tighten. The same applies below.

Note: Pictures are for reference only; please refer to the actual product.

2.2 Installation Steps

STEP 3

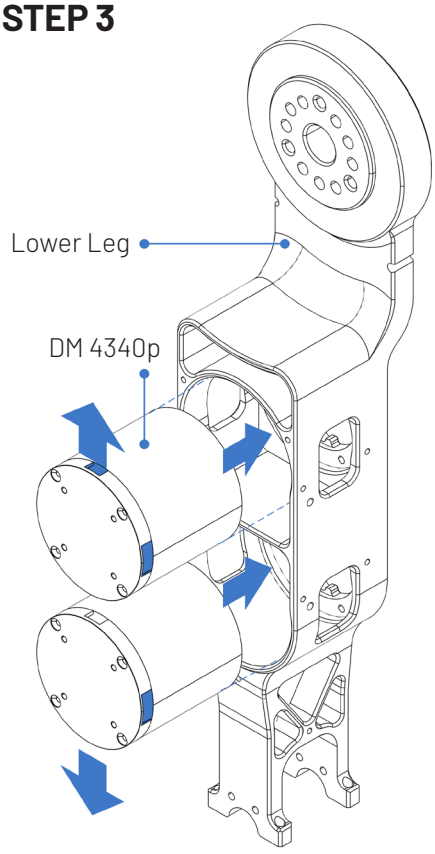

3 Place the DM 4340p into the lower leg mounting holes, and install the two serial ports one on top and one on the bottom.

STEP 4

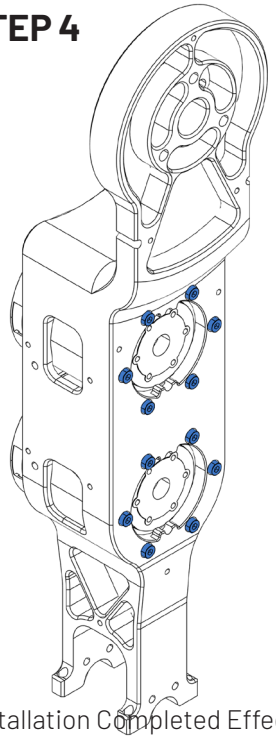

Installation Completed Effect Diagram

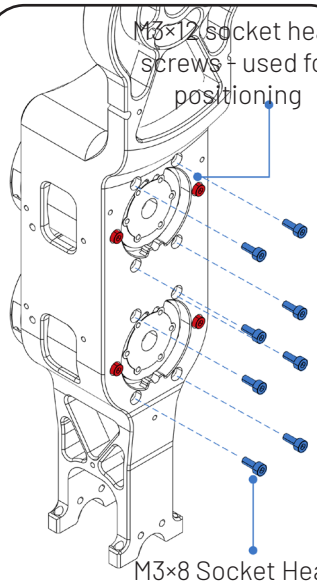

4 After turning over, drive in M3×8 socket head cap screws (using the same method as in the first part of assembly: first positioning, then diagonal tightening).

STEP 5

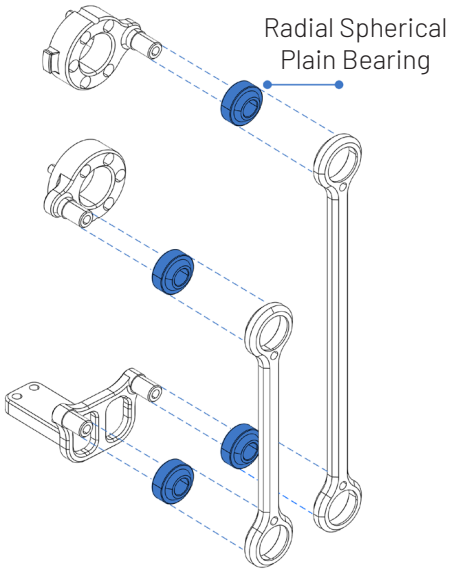

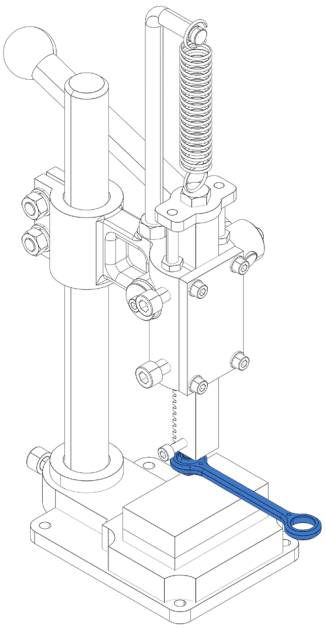

Hand Press Schematic Diagram

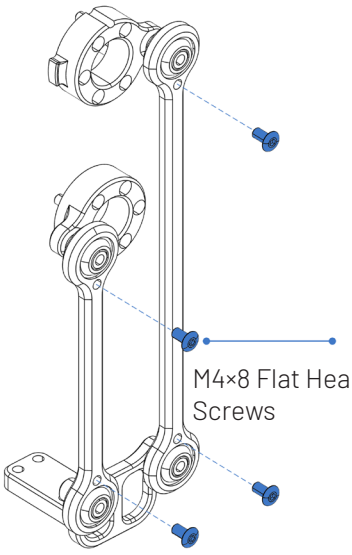

2.2 Installation Steps

STEP 6

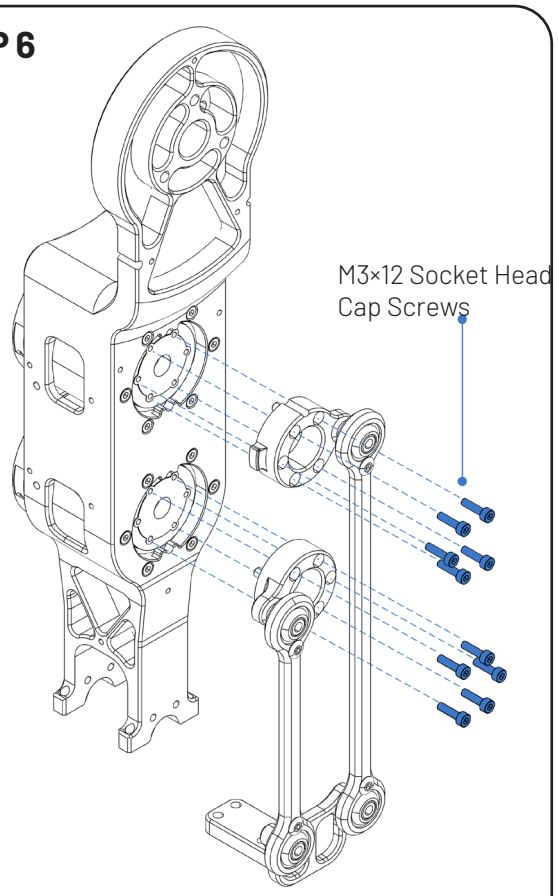

7 The ankle roll connector must be tightly fitted with the universal joint cross bearing. If the ankle roll connector is not tightly fitted with the universal joint cross bearing, use a hand press to press it into place.

STEP 7

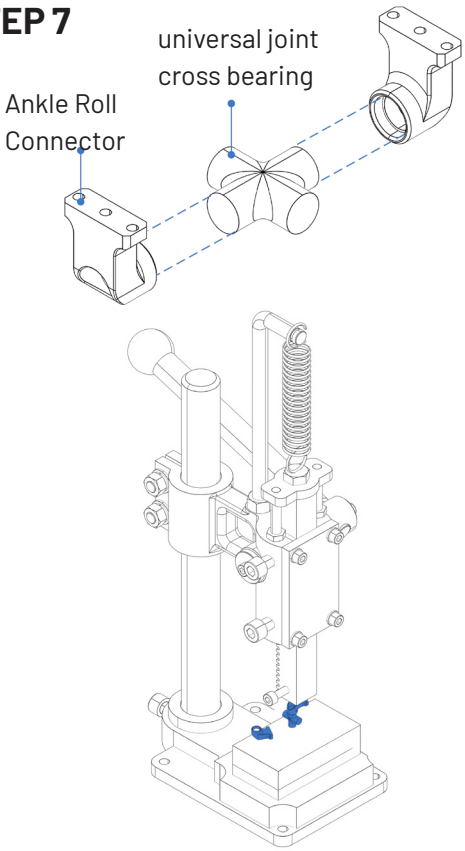

STEP 8-1

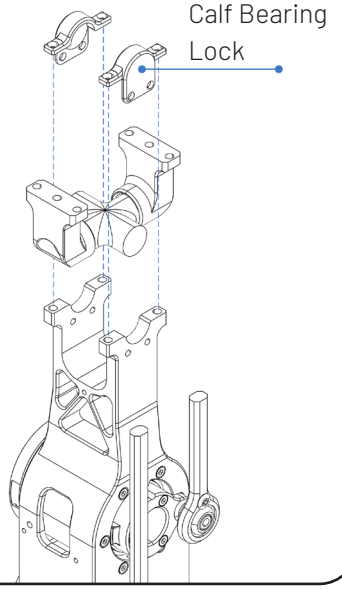

STEP 8-2

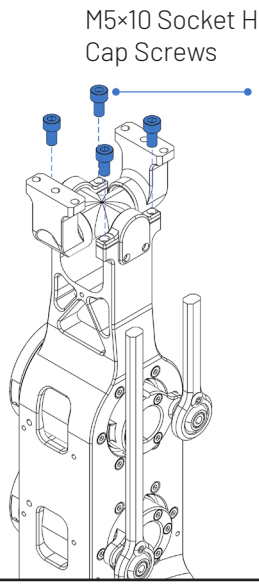

STEP 8-3

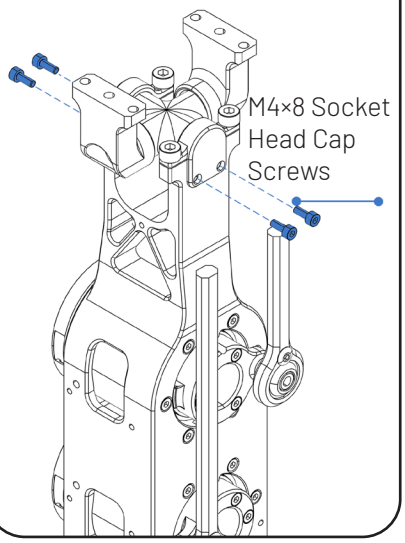

2.2 Installation Steps

STEP 9

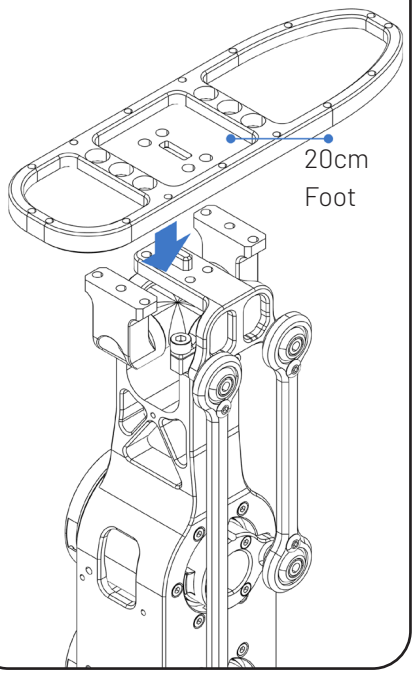

STEP 10

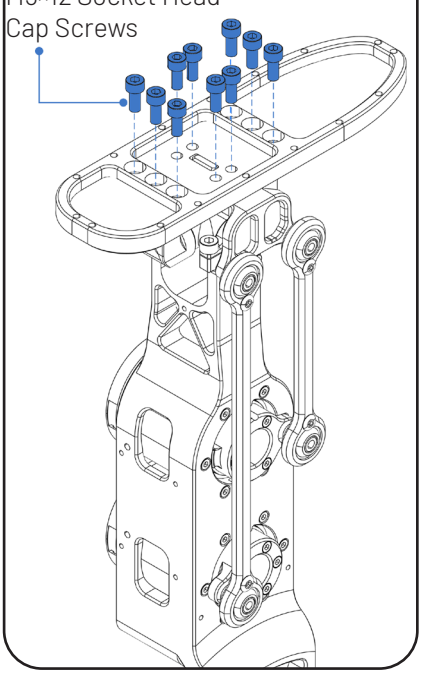

STEP 11

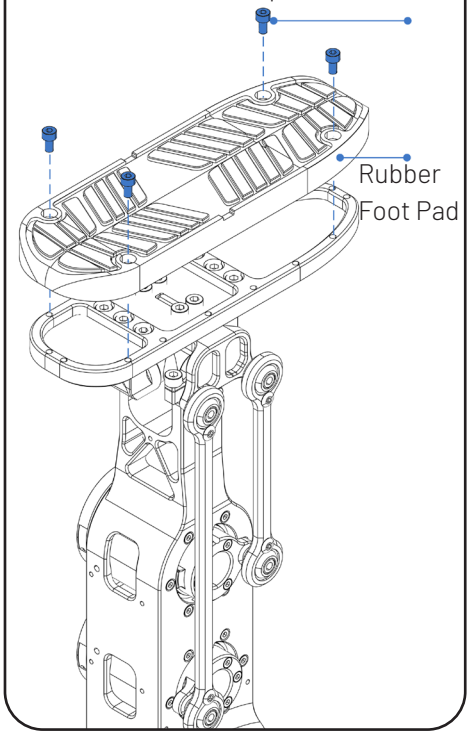

STEP 12

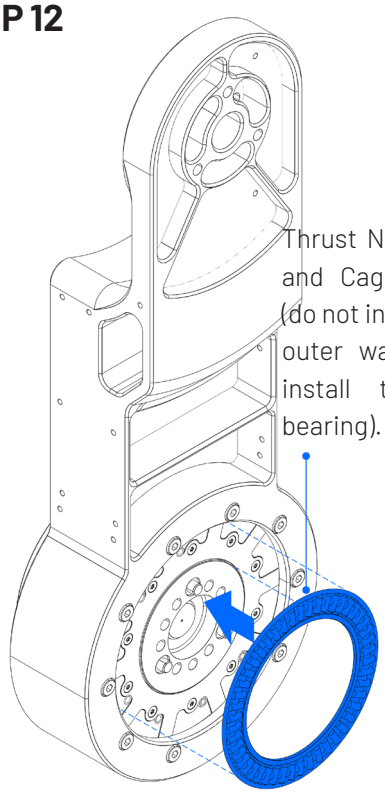

Thrust Needle Roller and Cage Assembly (do not install the two outer washers, only install the middle bearing).

STEP 13

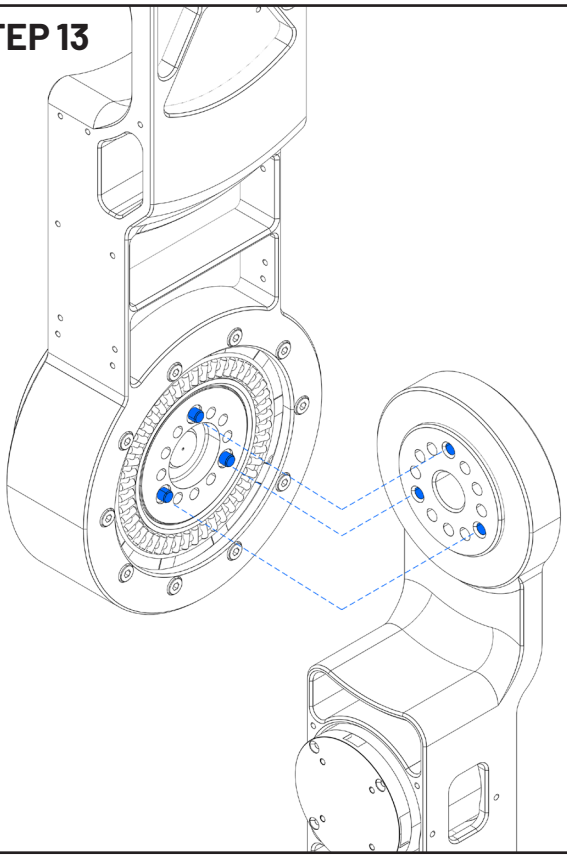

2.2 Installation Steps

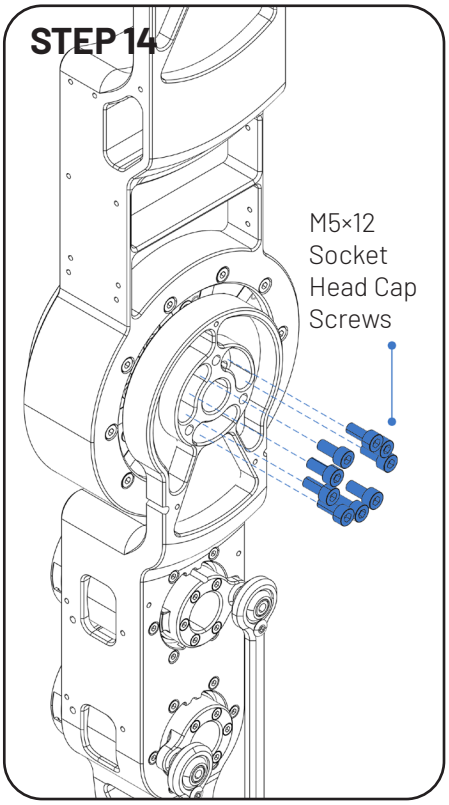

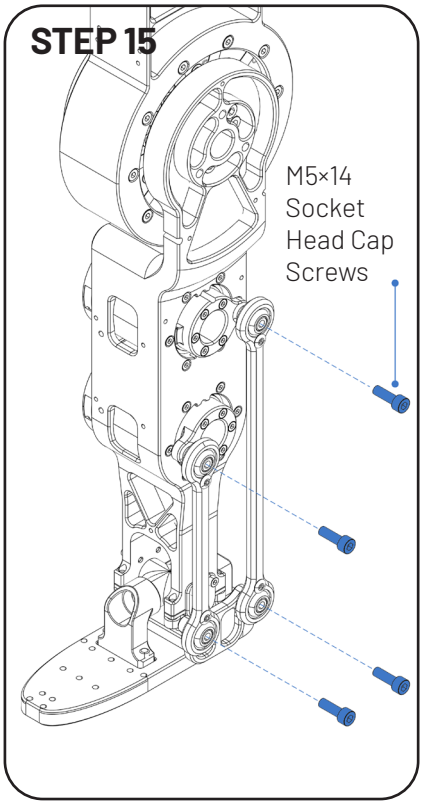

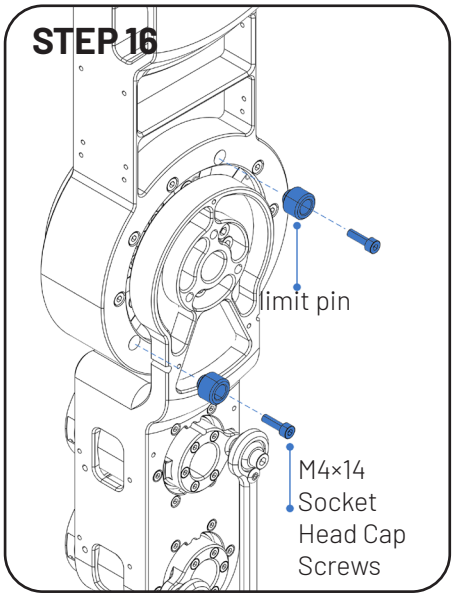

16 Depending on the left or right leg, remove the corresponding M4×8 socket head screws, insert the limit pin, and drive in M4×14 socket head screws.

*** Install the other leg using the same method. Once the installation of the other leg is completed, place it properly and set aside for later use. (The left and right leg assemblies should be mirror-symmetric).**

STEP 17

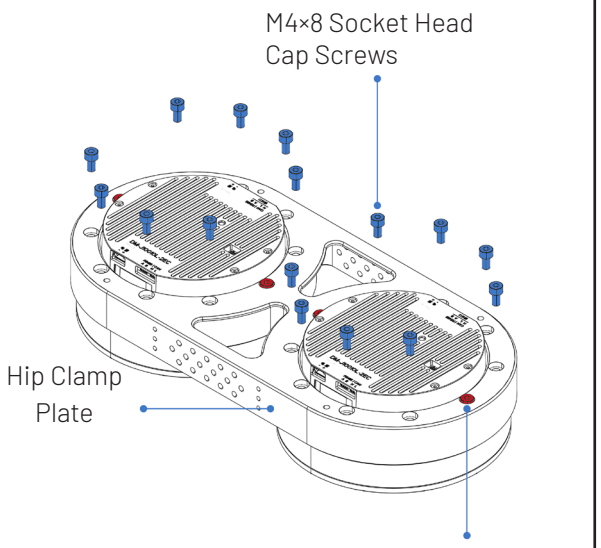

17 Place the DM-J10010L and hip clamp plate, align holes, ensure motor interfaces face the same direction, and install m4*8 socket head screws using the positioning method.

STEP 18

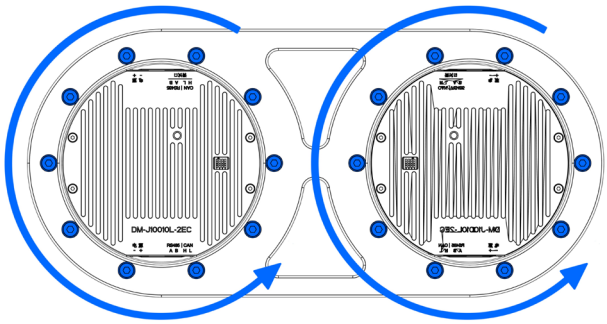

18 After tightening screws diagonally, adjust the electric screwdriver to the highest torque setting and tighten the screws clockwise in turn again (at least two cycles).

STEP 19

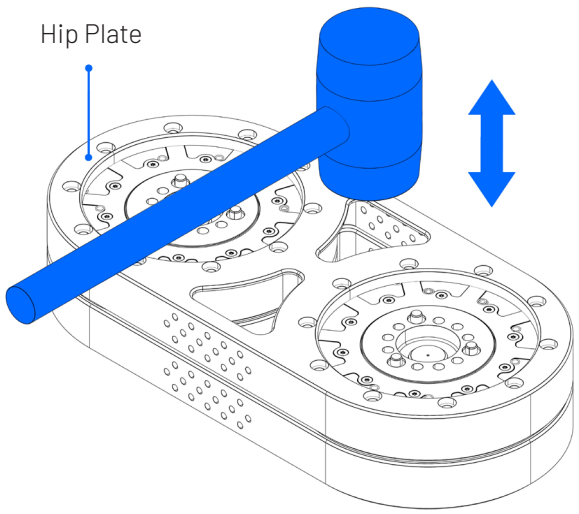

19 Install the other hip clamp plate. Tap the hip clamp plate with a hammer on the reverse side until the sound becomes solid / deep everywhere.

STEP 20

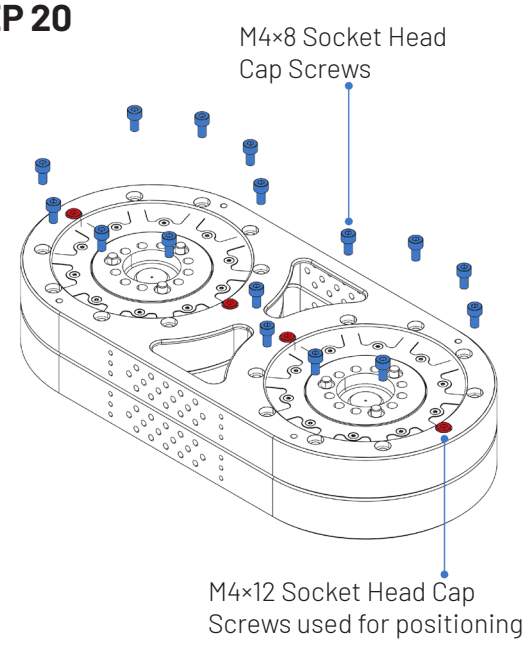

20 Use the positioning method and diagonal method to install socket head cup screws.

2.2 Installation Steps

STEP 21

Thrust Needle Roller and Cage Assembly (do not install the two outer washers, only install the middle bearing).

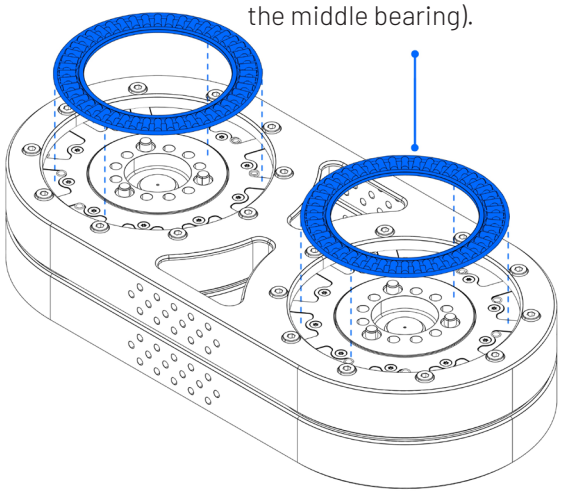

STEP 22

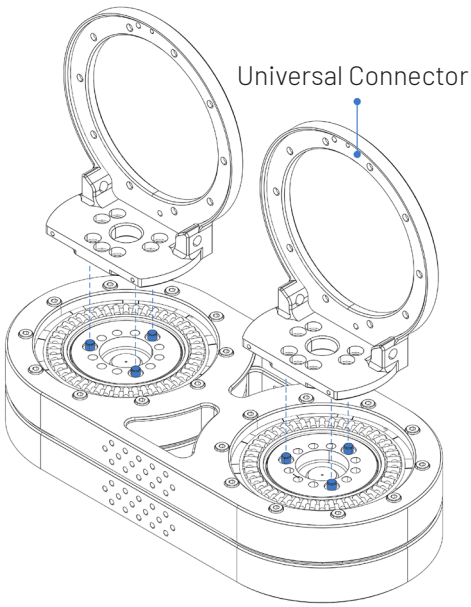

STEP 23

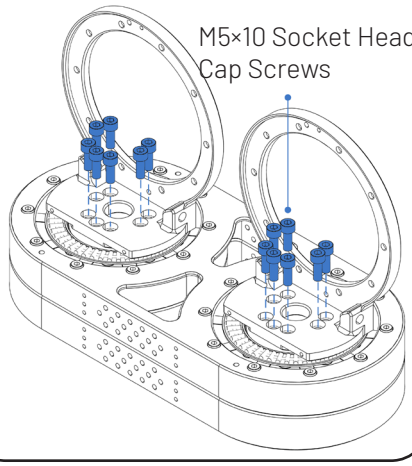

STEP 24

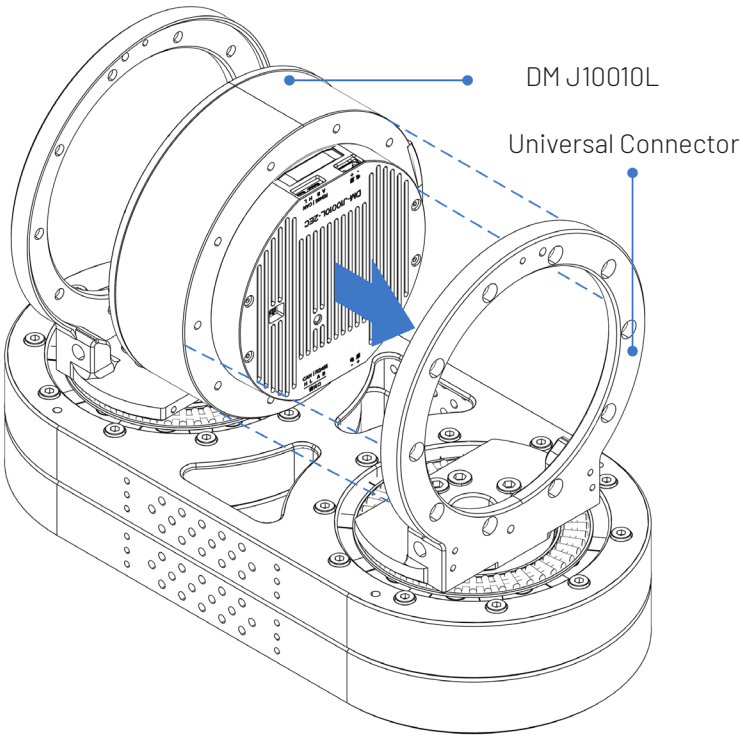

Motor placed in the direction as shown.
Align the power hole with the threaded hole.

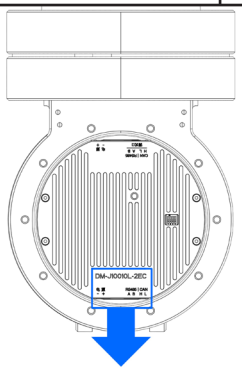

2.2 Installation Steps

STEP 25

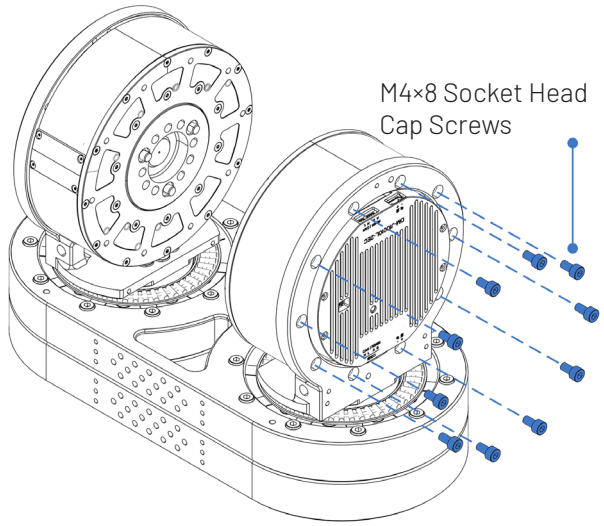

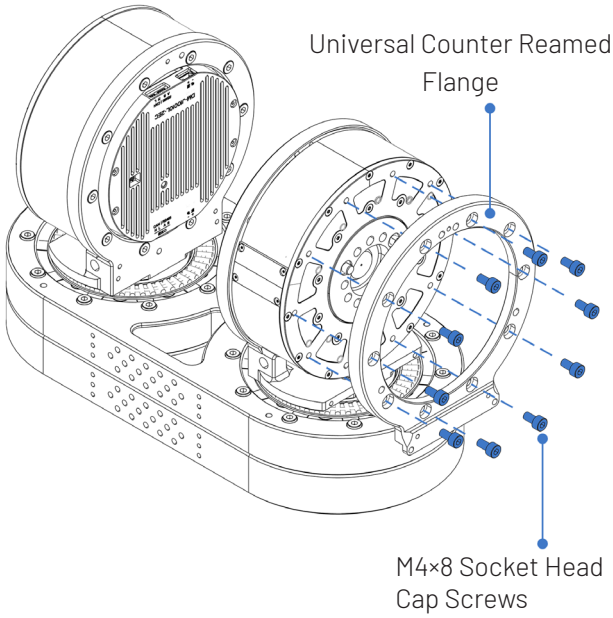

STEP 26

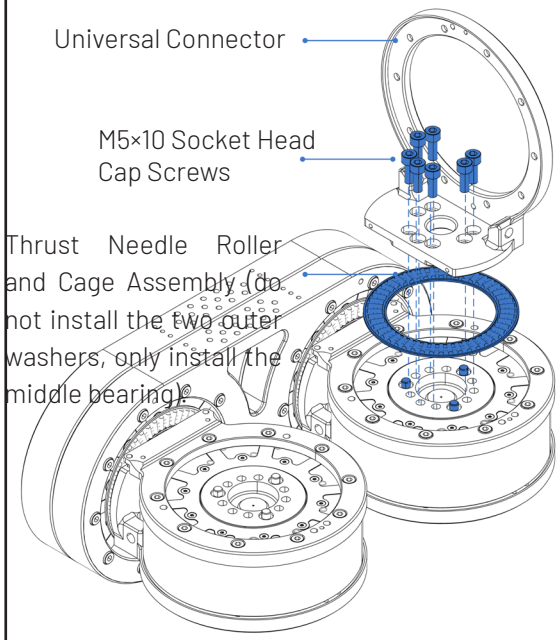

STEP 27

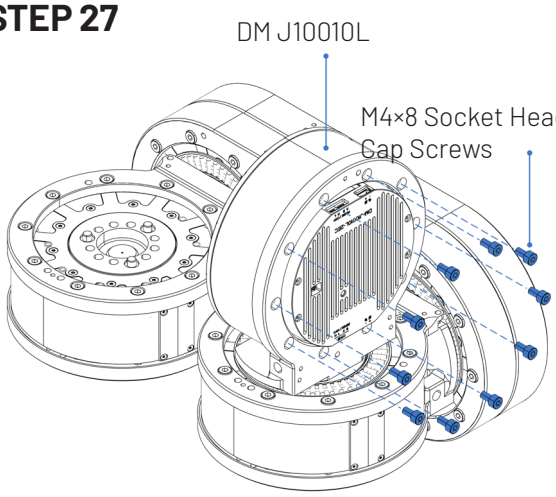

Motor placed in the direction as shown.
Align the power hole with the threaded hole.

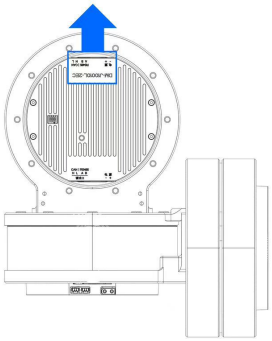

2.2 Installation Steps

STEP 28

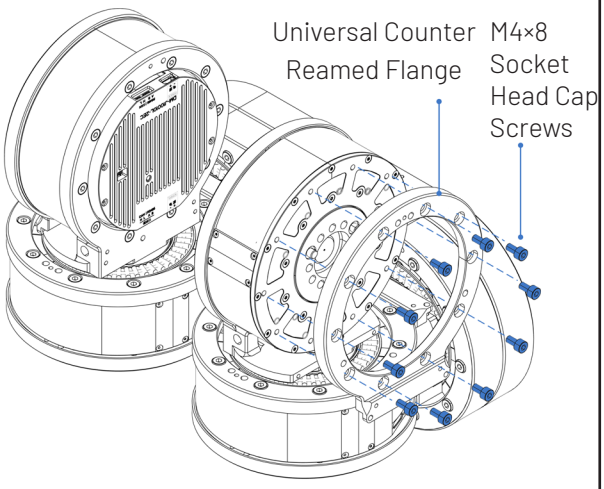

STEP 29

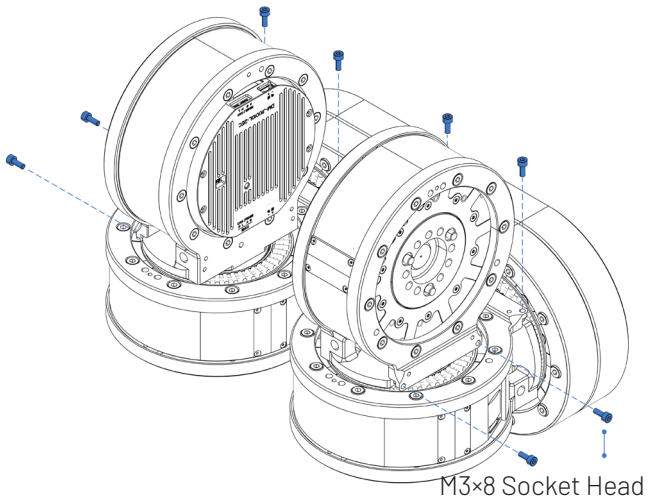

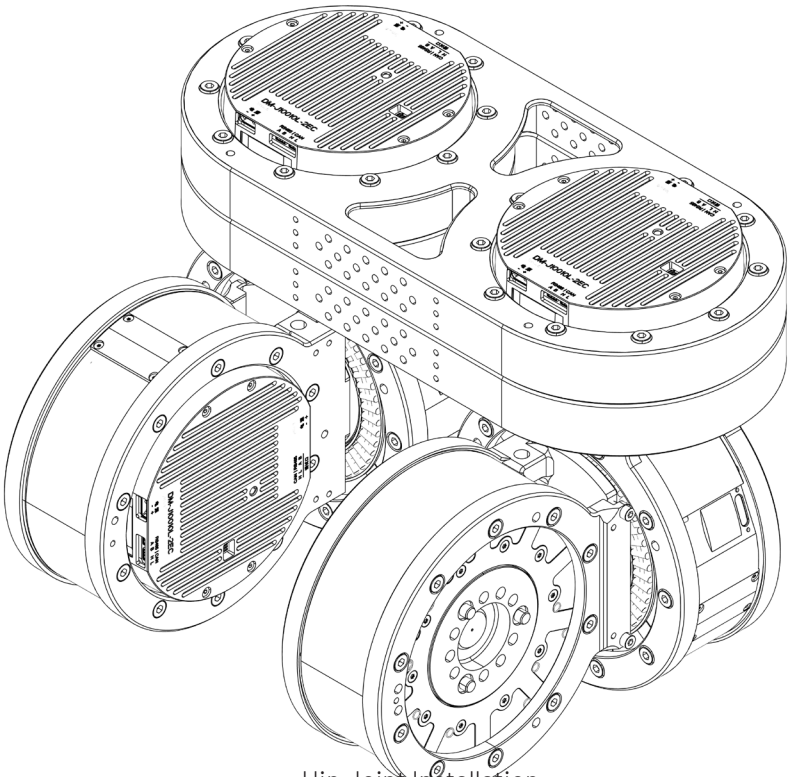

Hip Joint Installation Completed Effect Diagram

Leg and Hip Connection Installation Instructions

2.2 Installation Steps

STEP 30

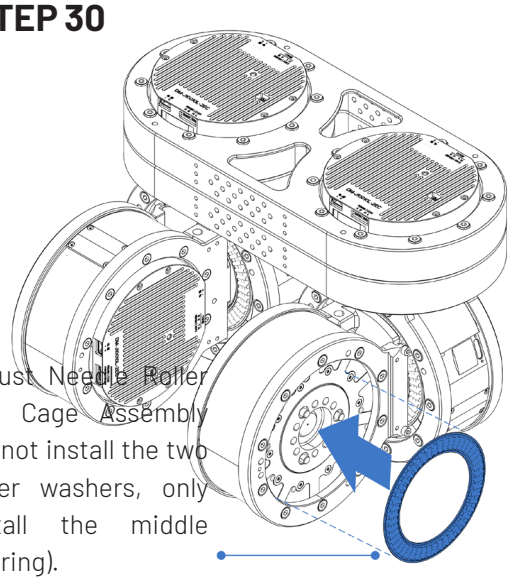

Thrust Needle Roller and Cage Assembly (do not install the two outer washers, only install the middle bearing).

STEP 31

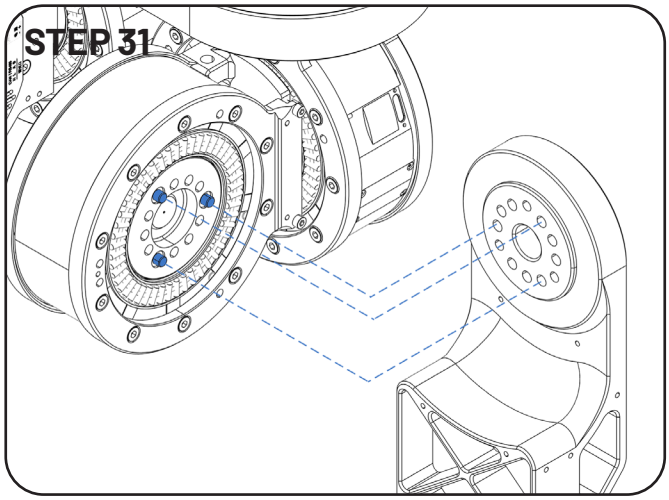

STEP 32

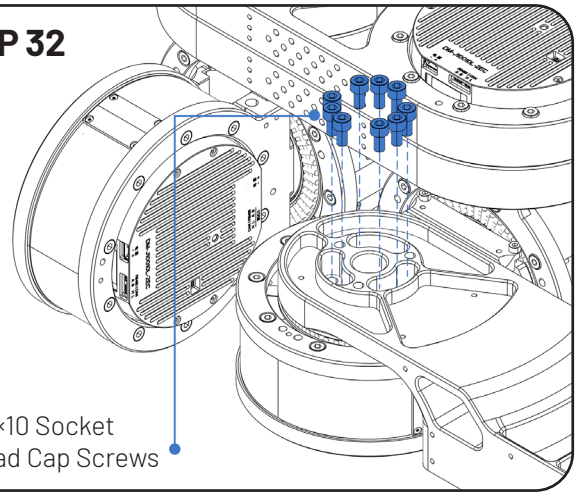

M5×10 Socket Head Cap Screws

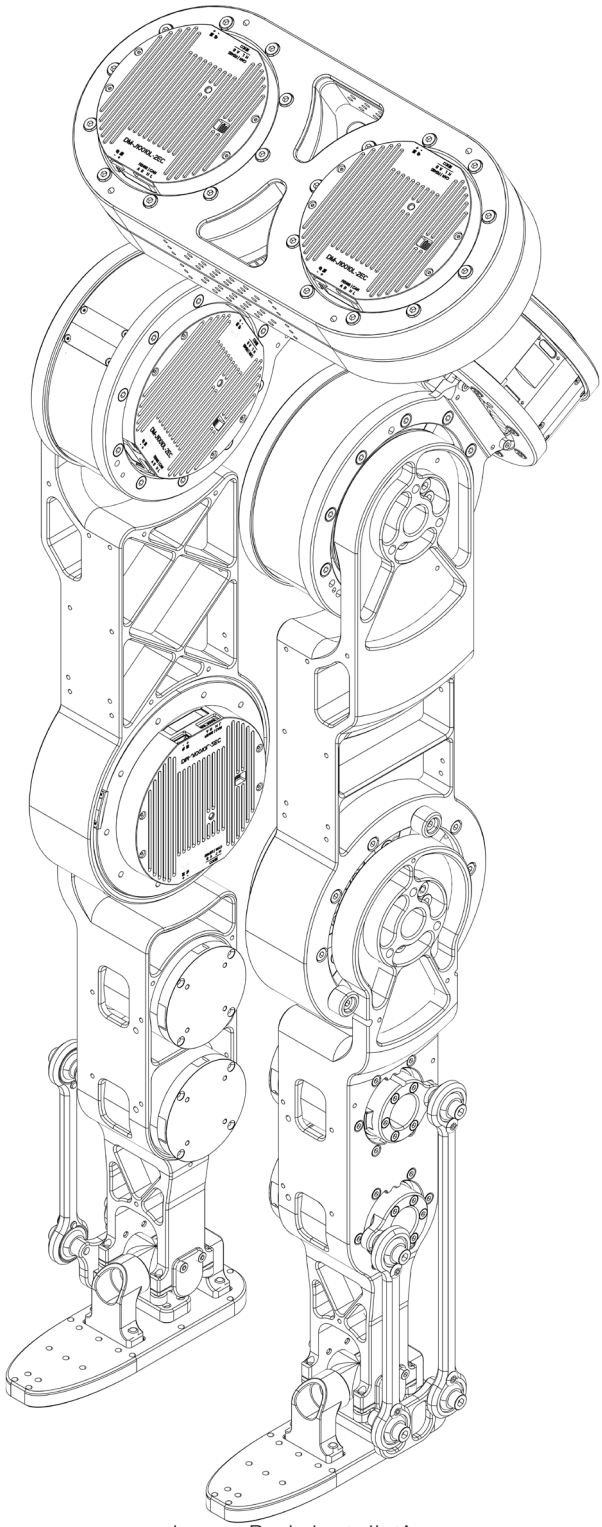

Lower Body Installation Completed Effect Diagram

2.2 Installation Steps

Waist Installation Instructions

STEP 33

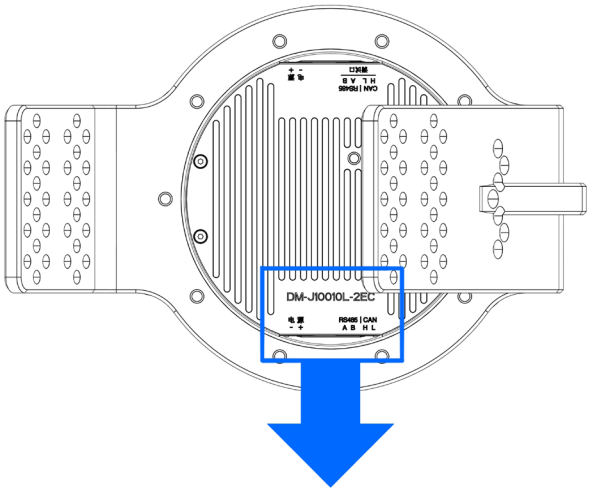

Motor placed in the direction as shown

STEP 34

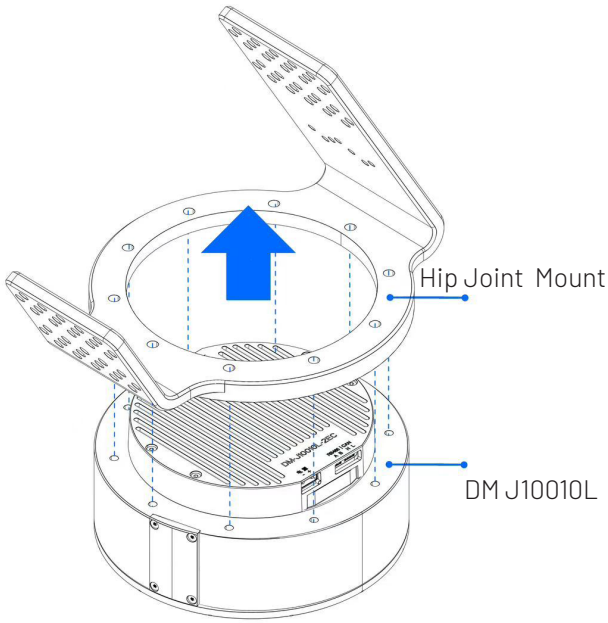

STEP 35

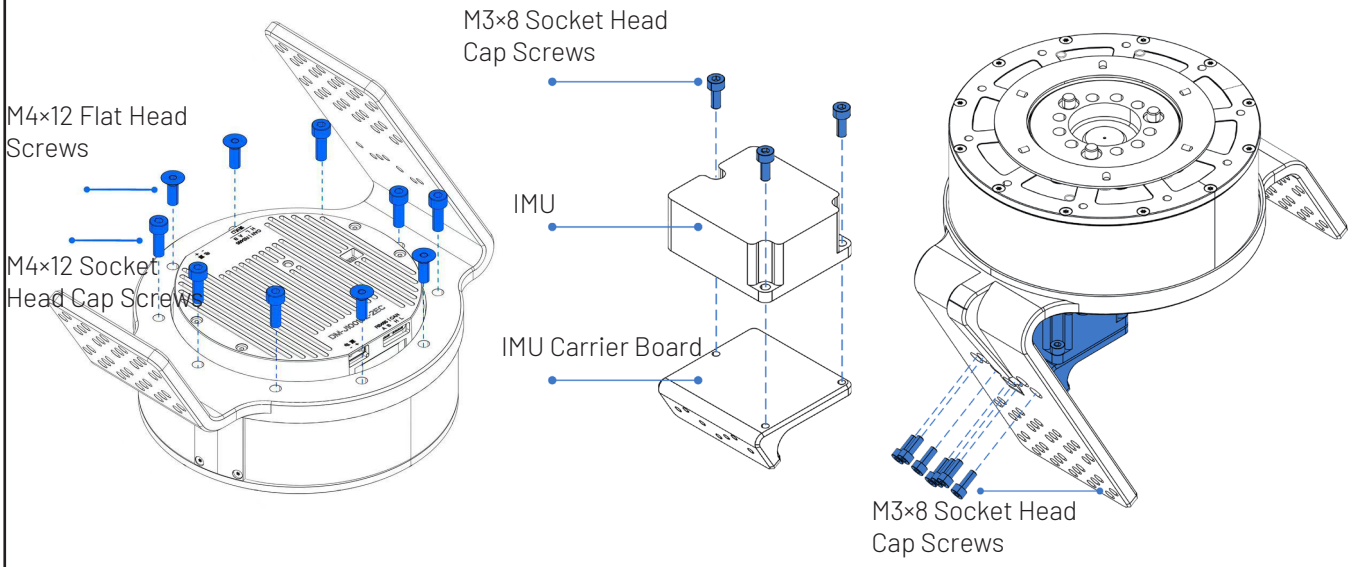

*Use a manual wrench for socket head screws in deep recesses.

2.2 Installation Steps

STEP 36

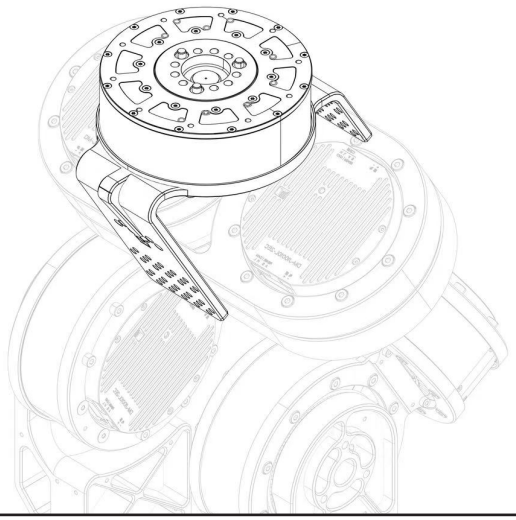

36 Place the assembled hip joint into the hip section.

STEP 37-1

Secure the outermost side using m4×12 socket head cap screws.

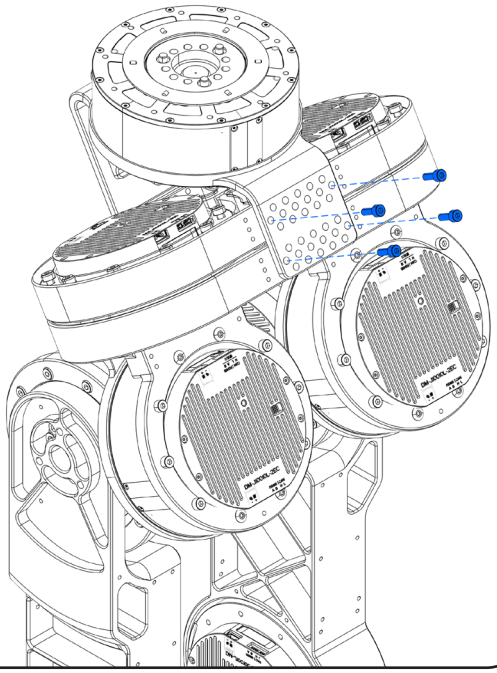

STEP 37-3

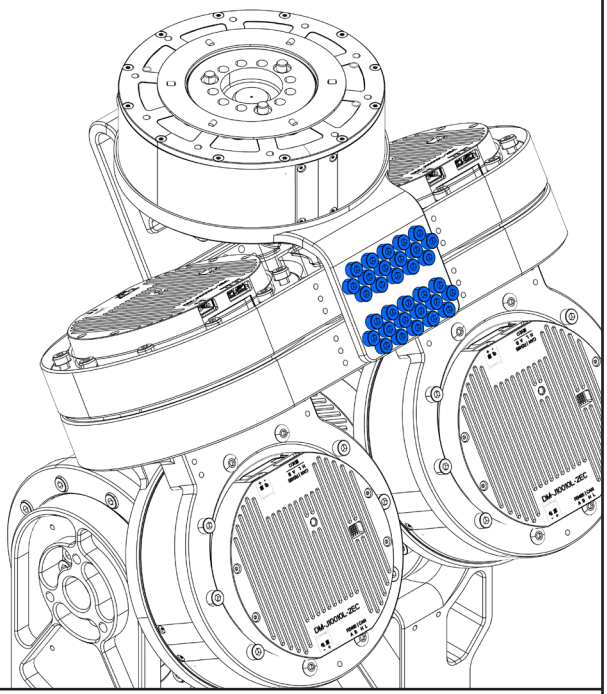

37 Then drive in the remaining m4*12 socket head cap screws.

STEP 37-2

M4×12 Socket Head Cap Screws

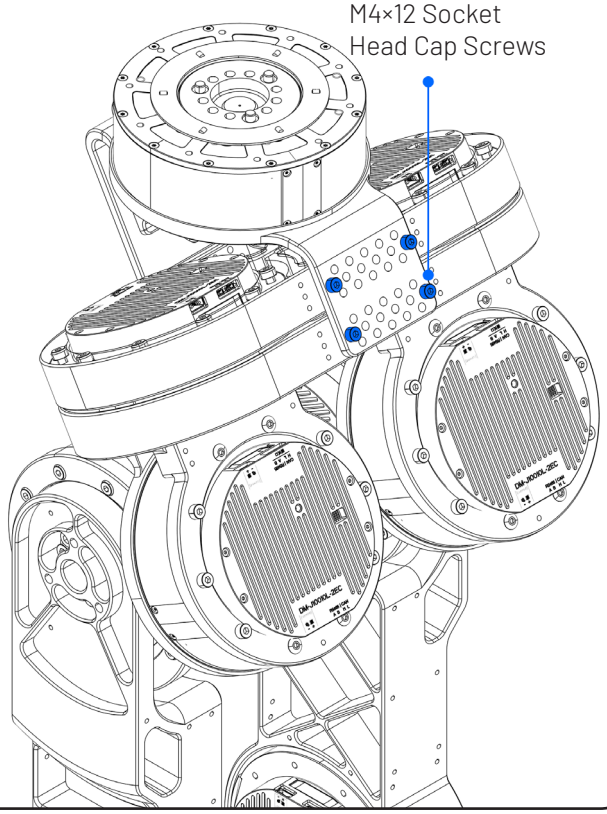

2.2 Installation Steps

STEP 38

38 Install the front m4×12 socket head cap screws following Step 37.

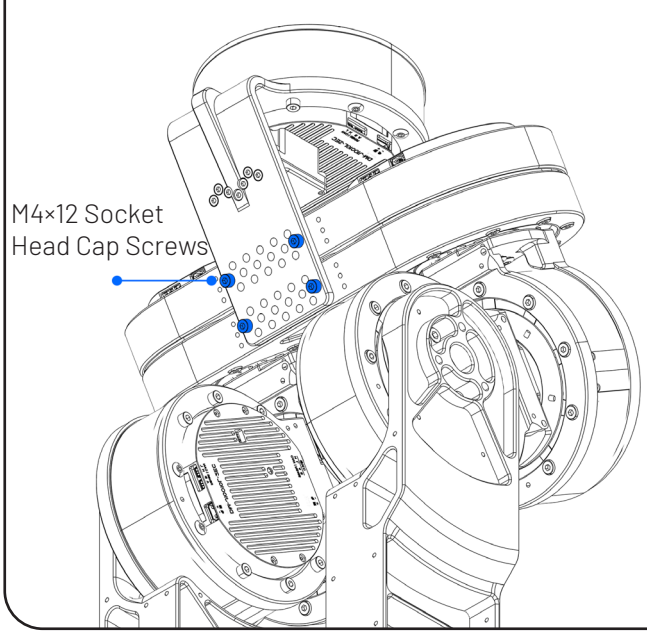

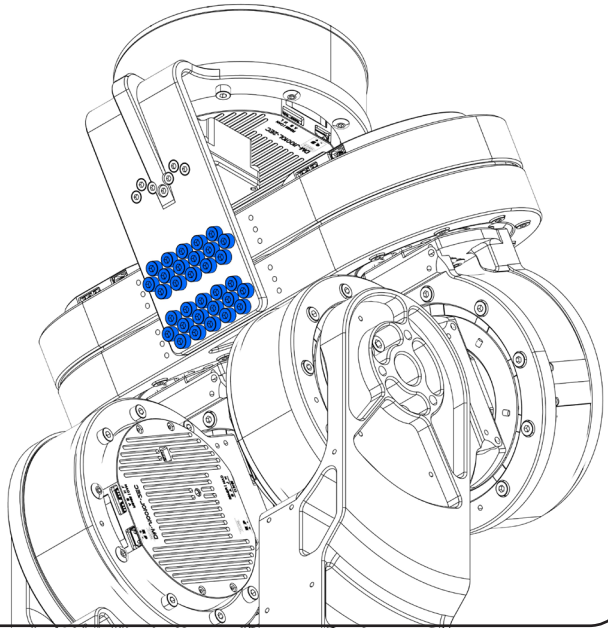

STEP 39

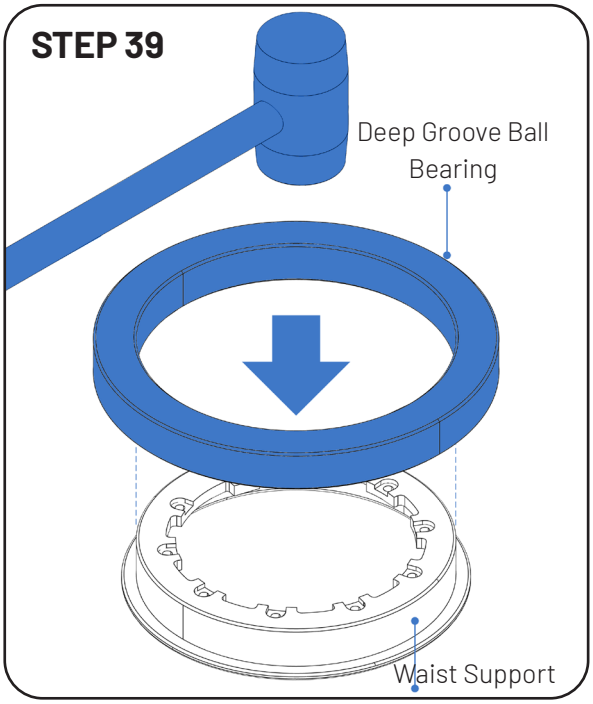

STEP 40

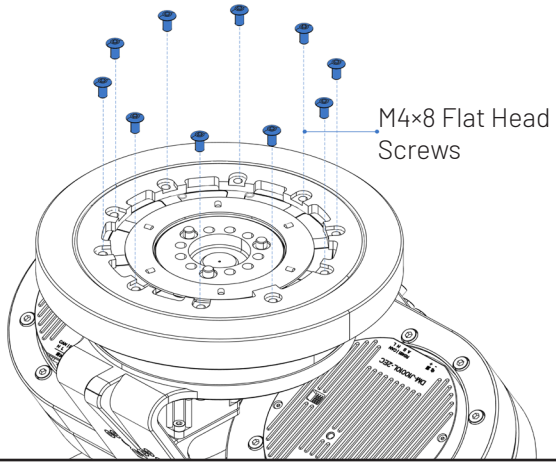

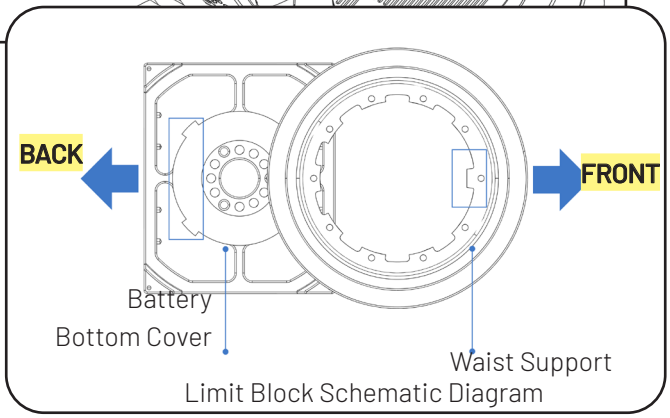

40&41 When installing the waist support and the battery bottom cover, pay attention to the orientation of the limit slots. The orientation of the limit slot for the bearing fixing should align with the front direction of the robot, and the orientation of the limit slot for the battery bottom cover should align with the back direction of the robot.

2.2 Installation Steps

STEP 41

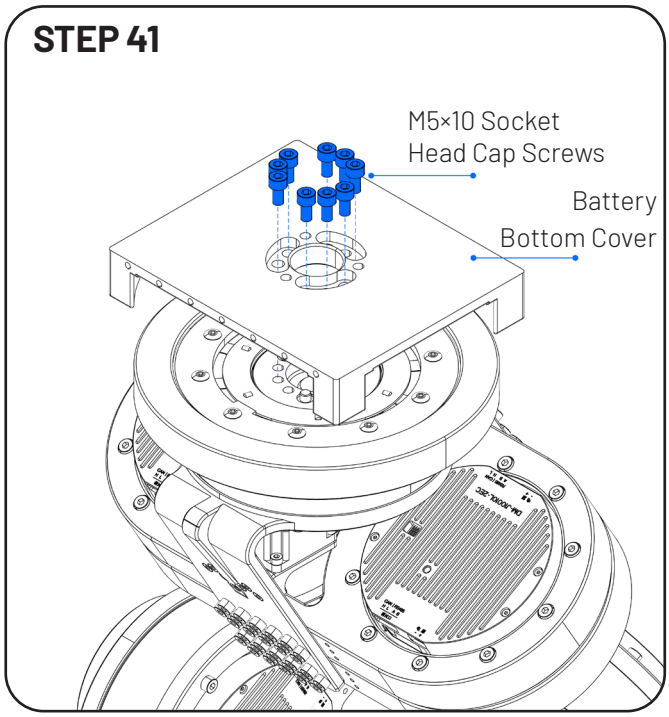

STEP 42-1

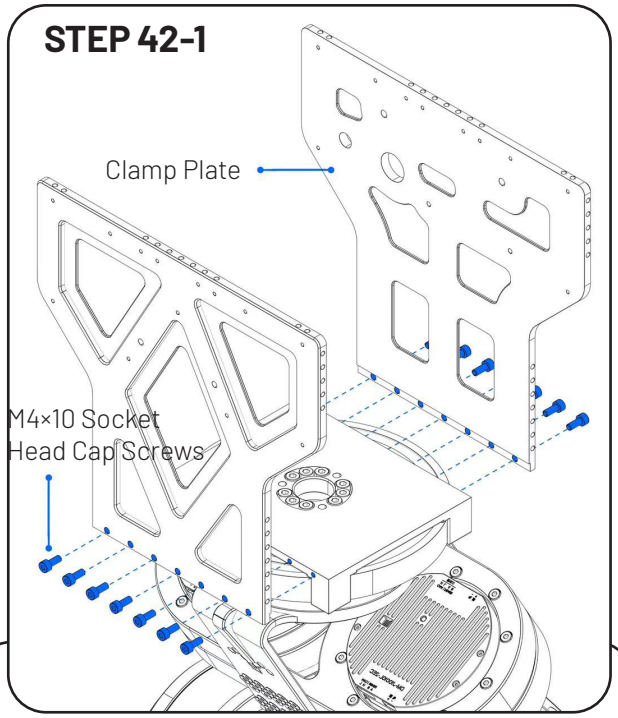

STEP 42-2

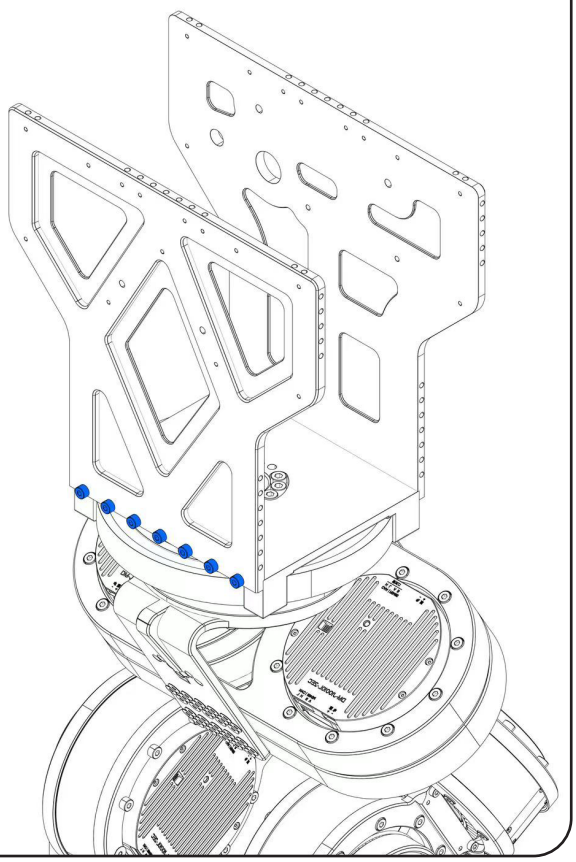

STEP 43

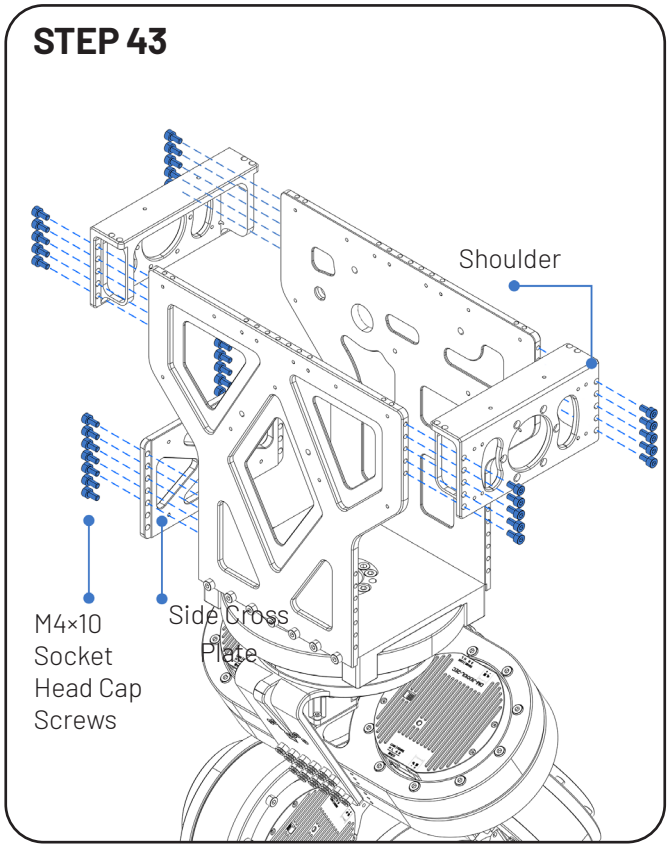

43 Do not install the side cross plate on one side yet, to facilitate battery installation later.

2.2 Installation Steps

STEP 44

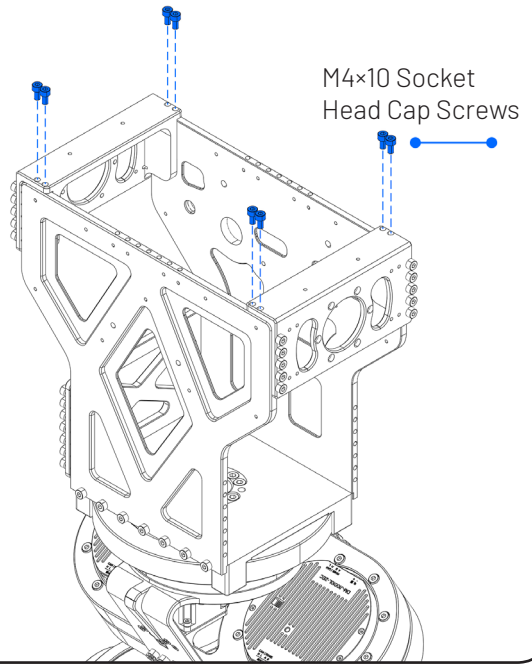

45 Place the DM 4340p motor as shown, **ensuring the motor interface faces vertically upward** (for easy wiring).

STEP 45

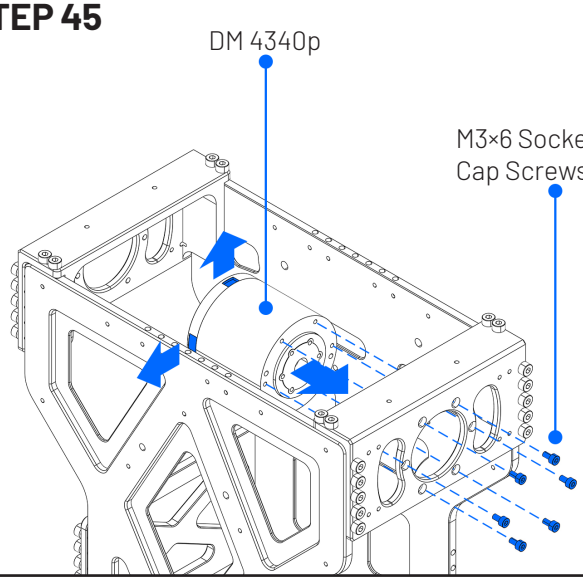

STEP 46

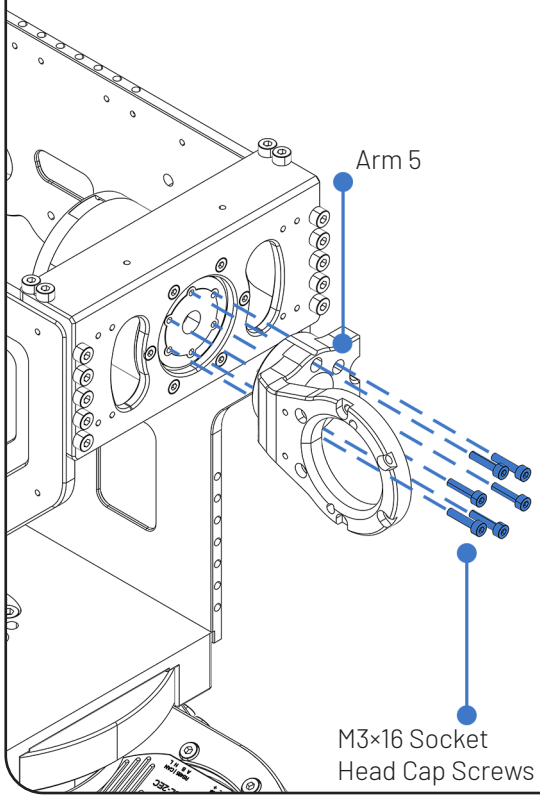

STEP 47

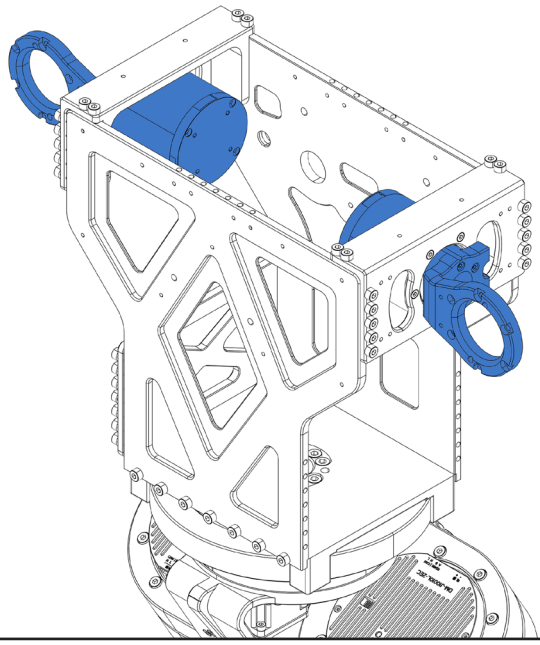

47 Follow the steps above to install the opposite arm joint.

2.2 Installation Steps

STEP 48

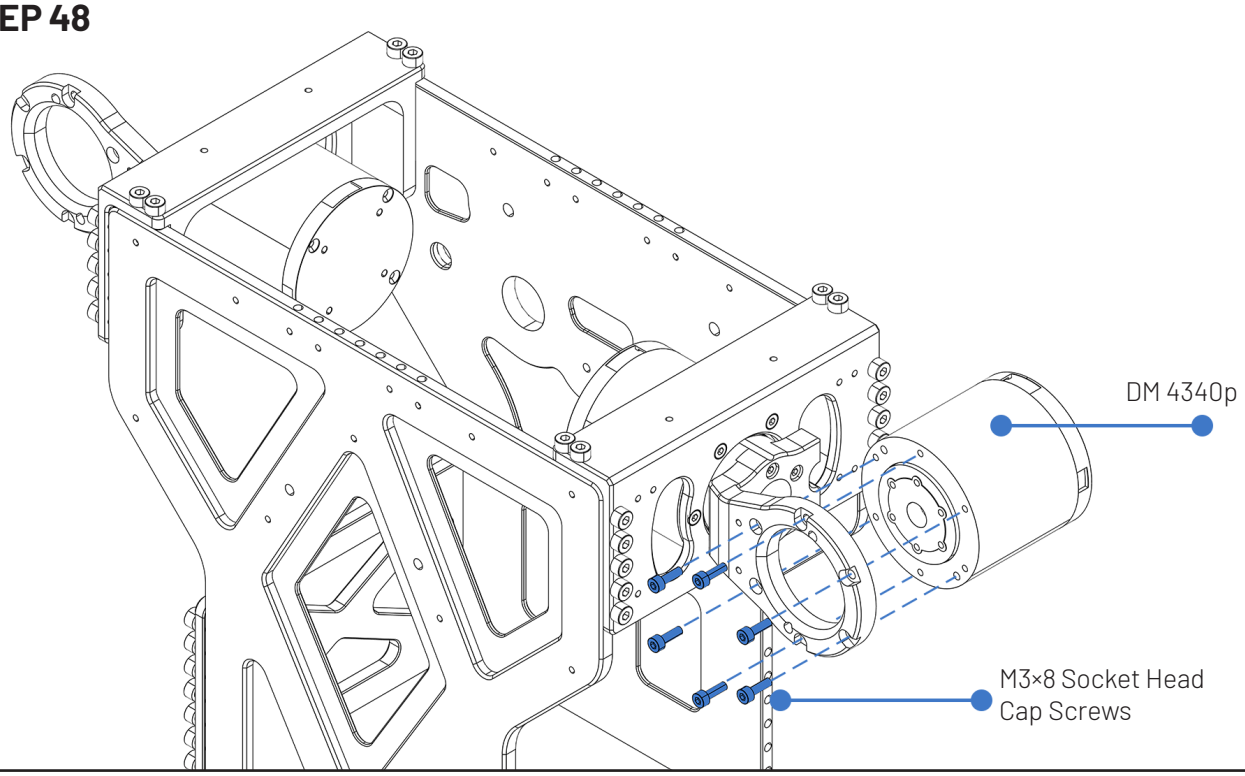

48 Follow the steps above to install the opposite part.

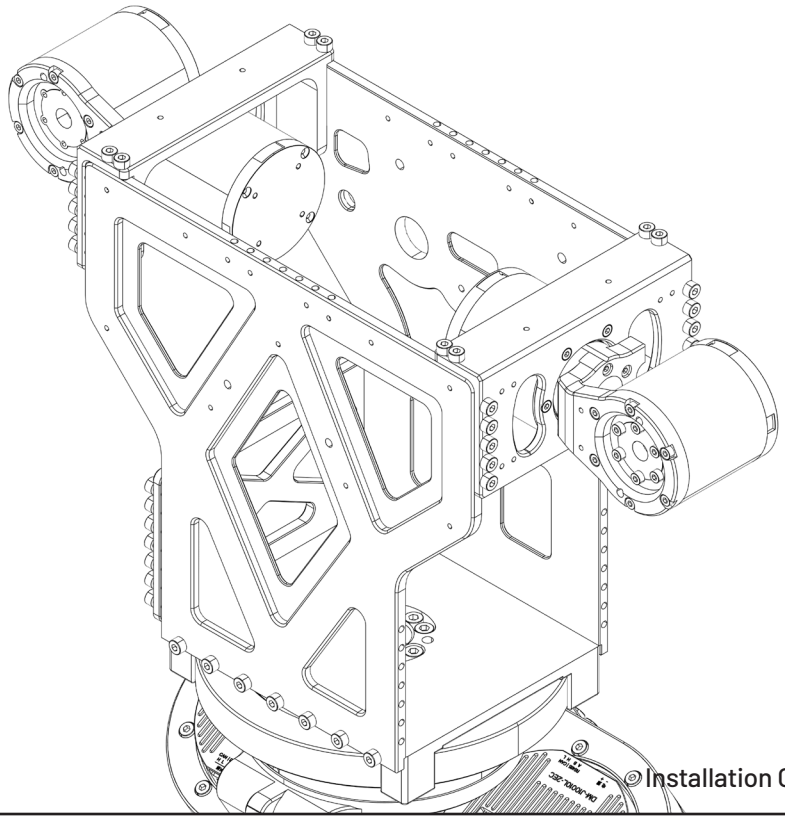

Installation Completed Effect Diagram

2.2 Installation Steps

Arm Connection Installation Instructions

STEP 49

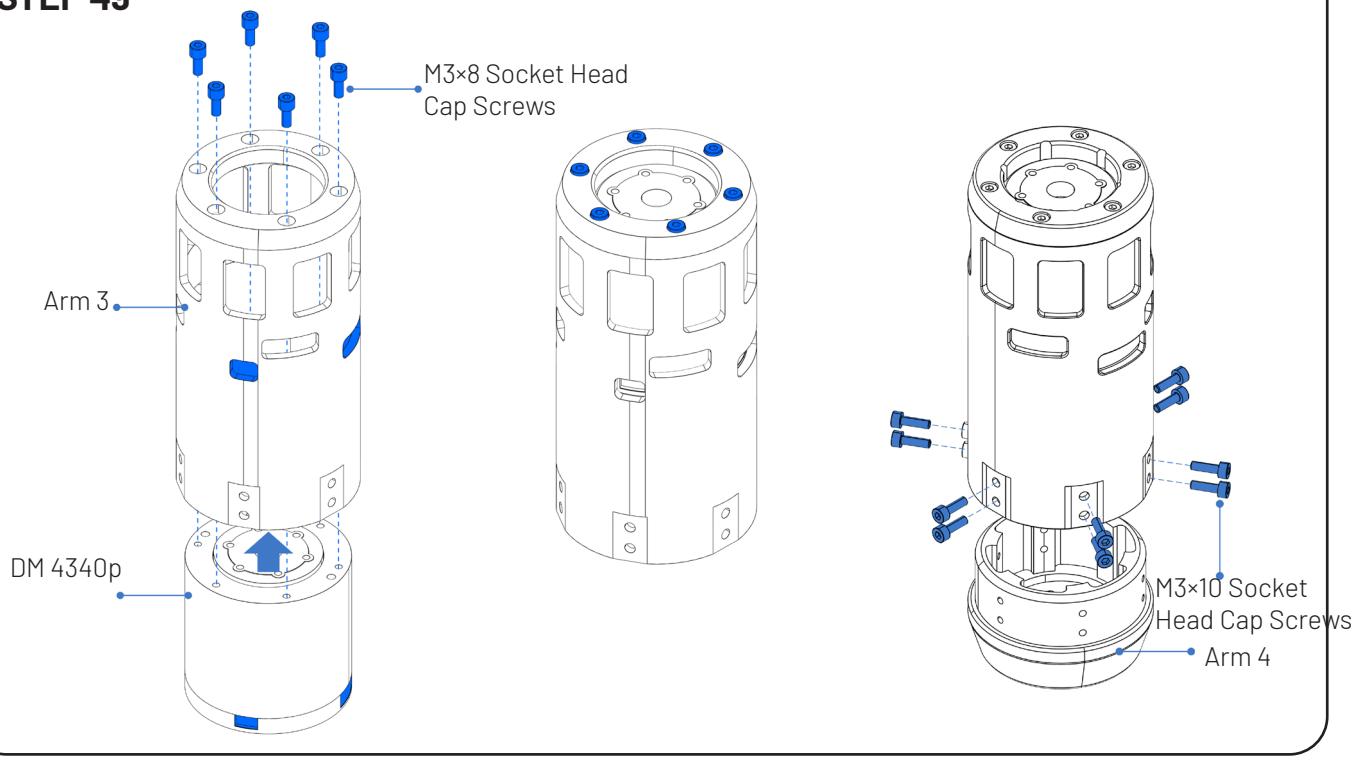

49 Place the D4340p motor according to the robot's standing orientation, **ensuring that the motor interface faces the same direction as the robot's facing direction** (to avoid misalignment).

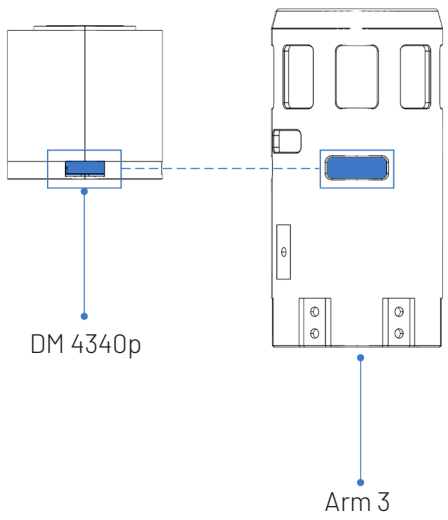

STEP 50

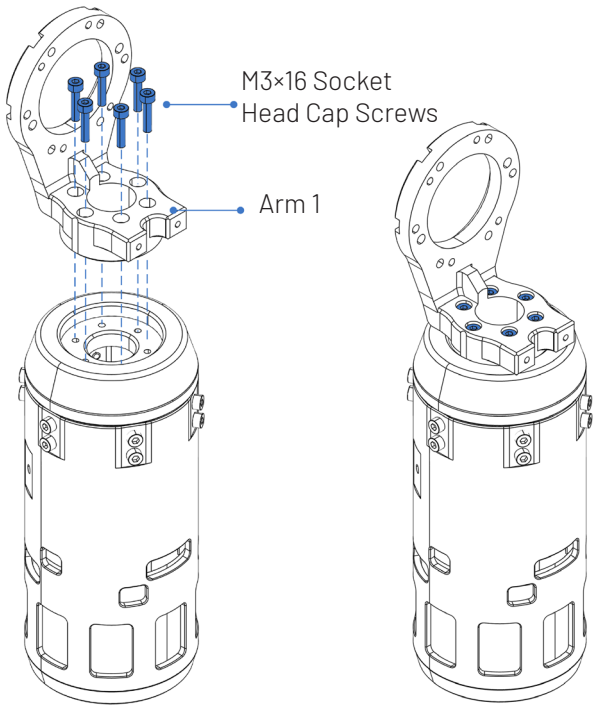

2.2 Installation Steps

STEP 51

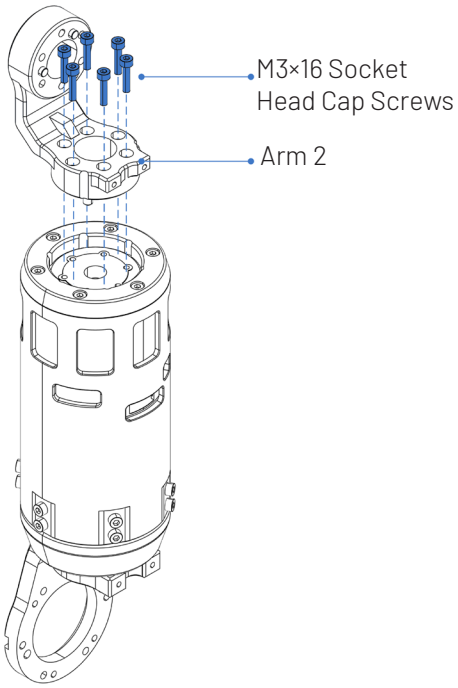

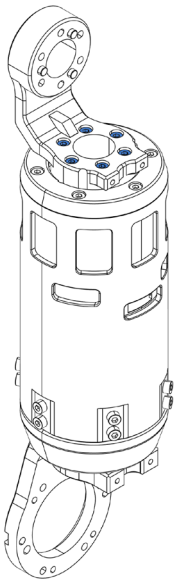

52 Place the DM4340p motor as shown. Ensure the elbow joint motor interface faces vertically downward, and the shoulder joint motor interface faces vertically upward (for easy wiring).

STEP 52

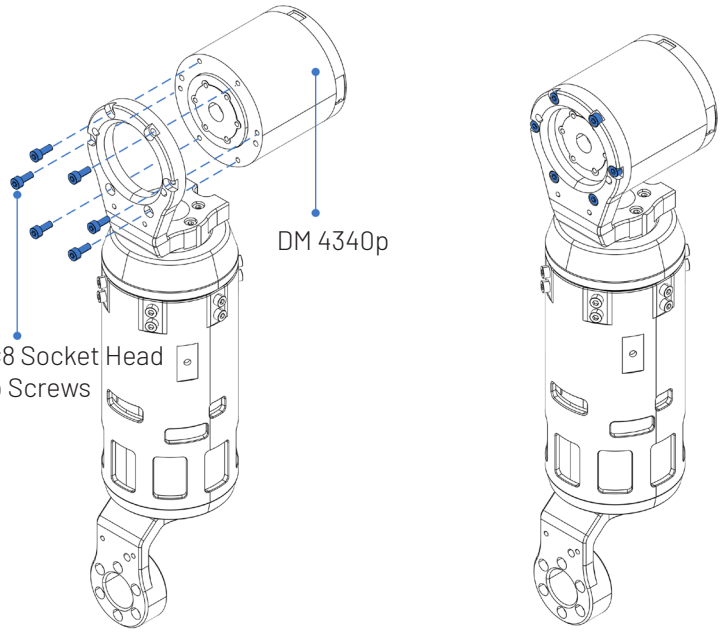

STEP 53

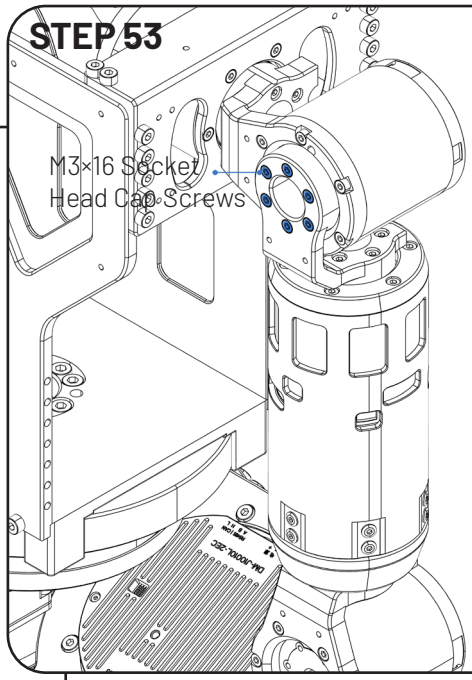

53 Using the diagonal positioning method, drive M3×16 socket head screws into the shoulder in sequence to secure the DM 4340p.

2.2 Installation Steps

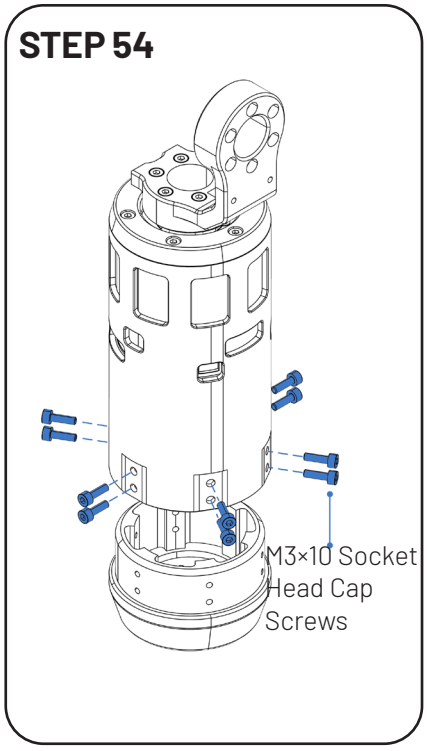

54 Use M3×10 socket head screws to secure the upper and lower parts of the forearm.

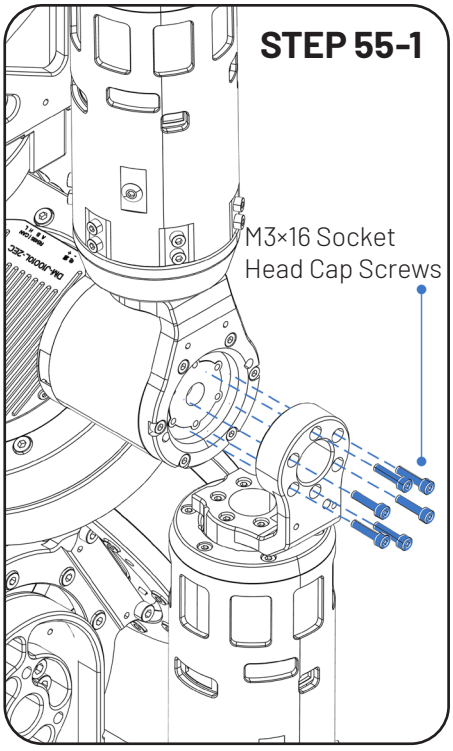

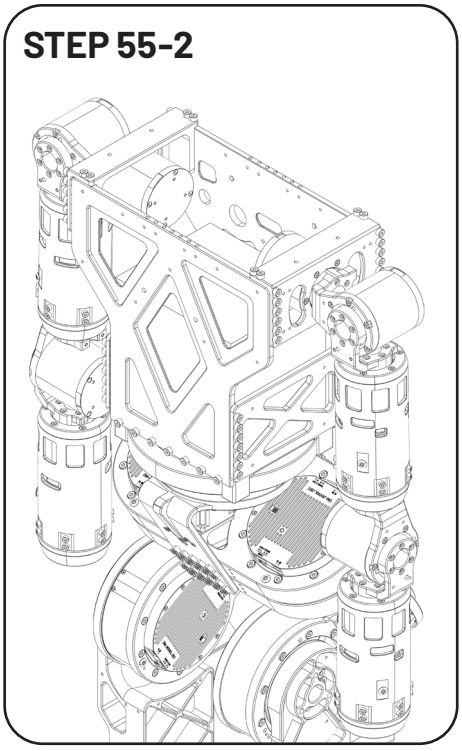

55 Use M3×16 socket head screws to secure the upper and lower parts of the forearm. Install the opposite side arm as a mirror image.

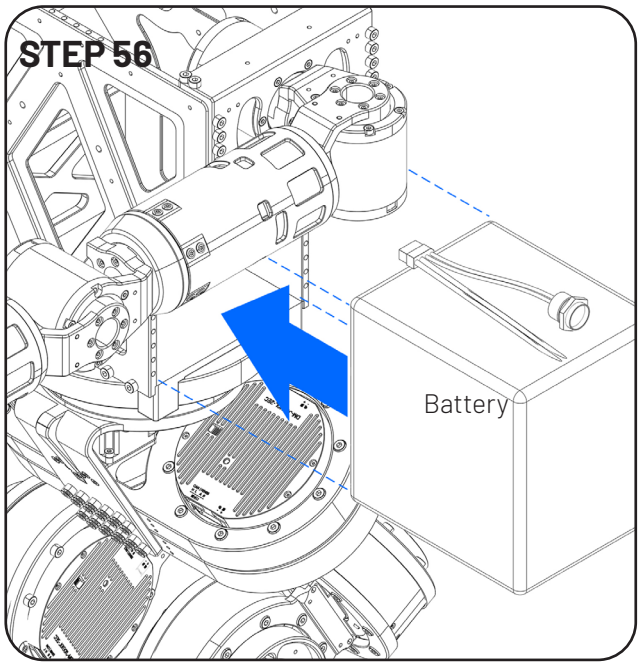

56 Install the battery, and then install the side cross plate from step 43.

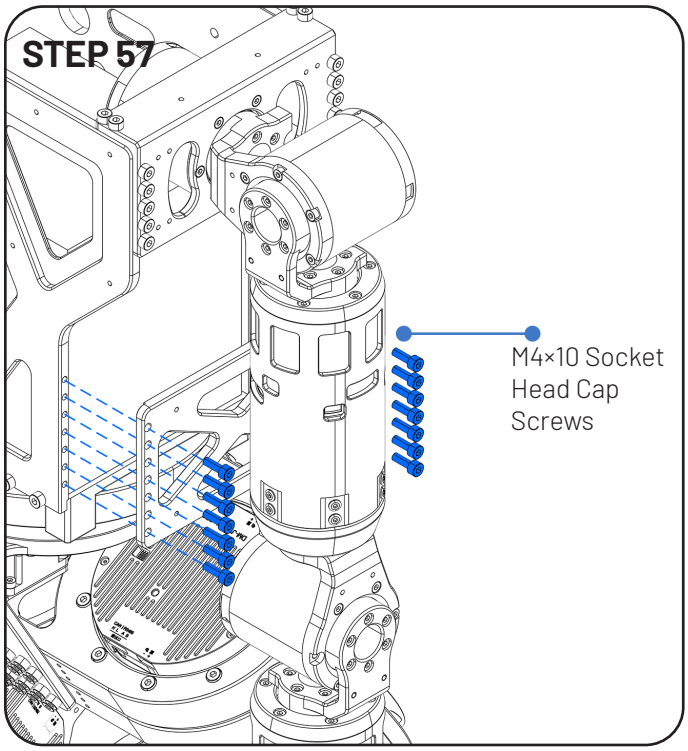

Cable Fastener Installation Instructions

2.2 Installation Steps

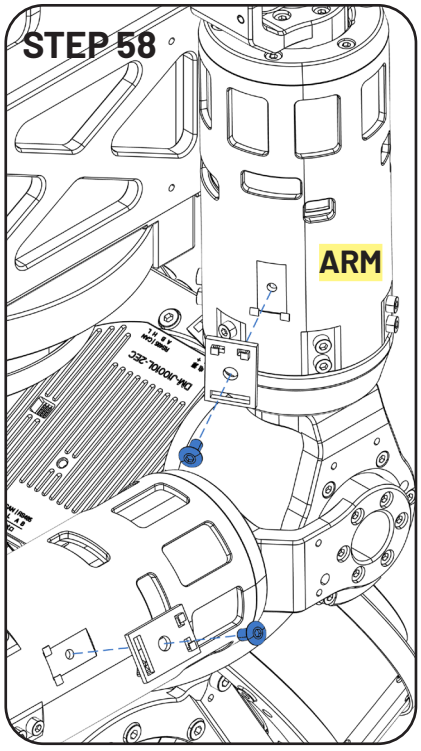

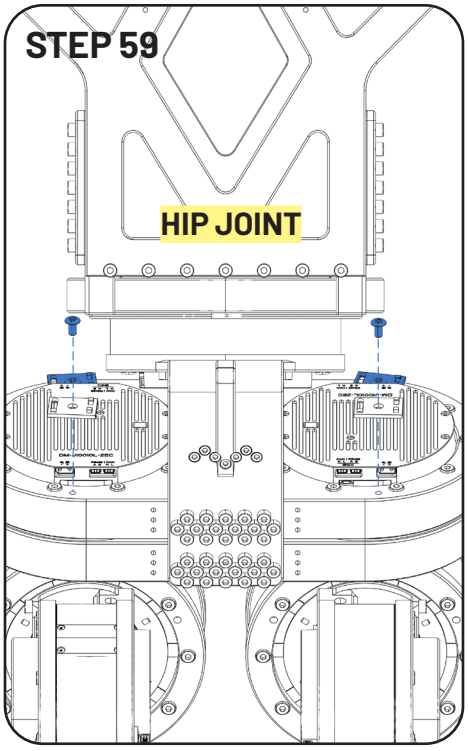

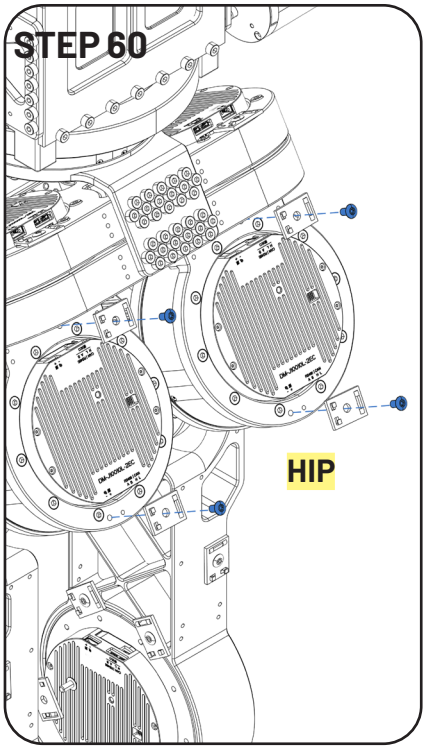

58-63 During the assembly of the cable fixing components, all screws are M4×8 flat head screws. During assembly, the insertion positions of the cable management plates for the arm and leg are as shown in the figure (using the right arm and right leg as examples).

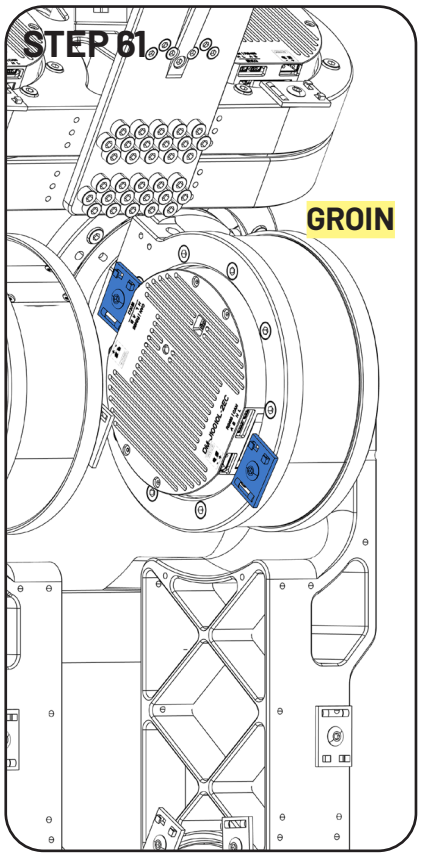

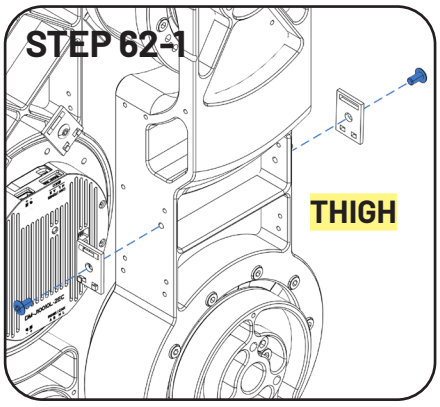

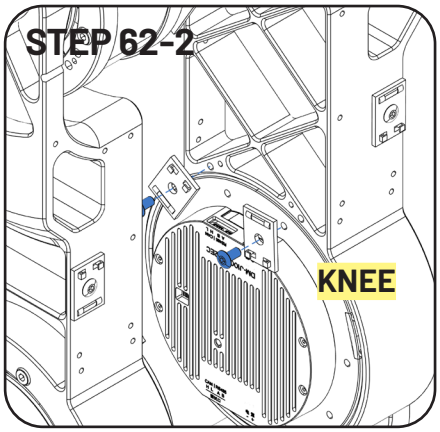

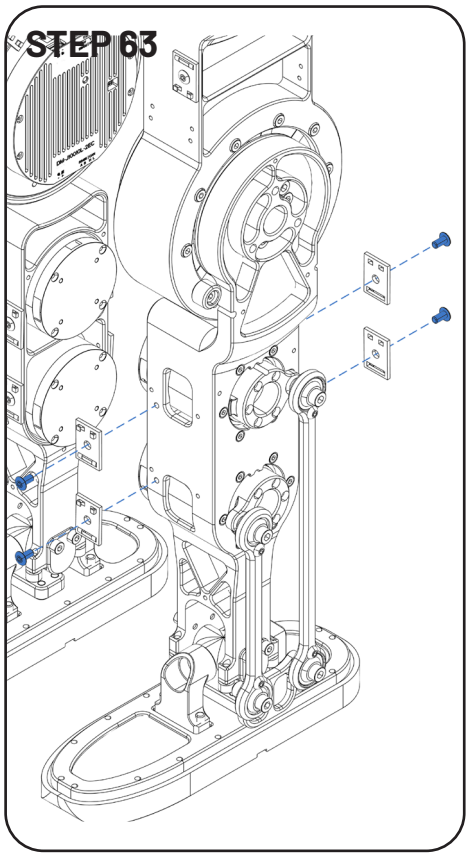

2.2 Installation Steps

Installation Instructions for Switches, Interfaces, etc.

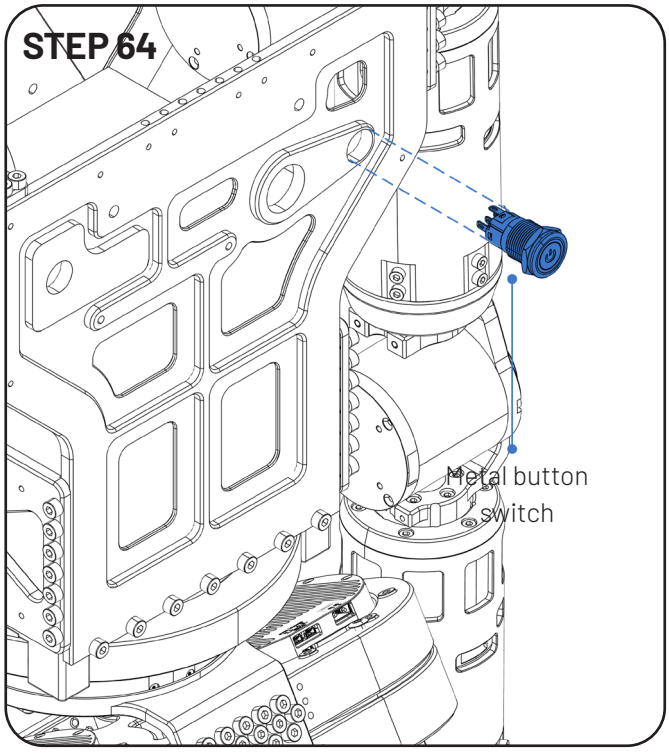

64&66 Simply tighten the switch onto the back of the robot.

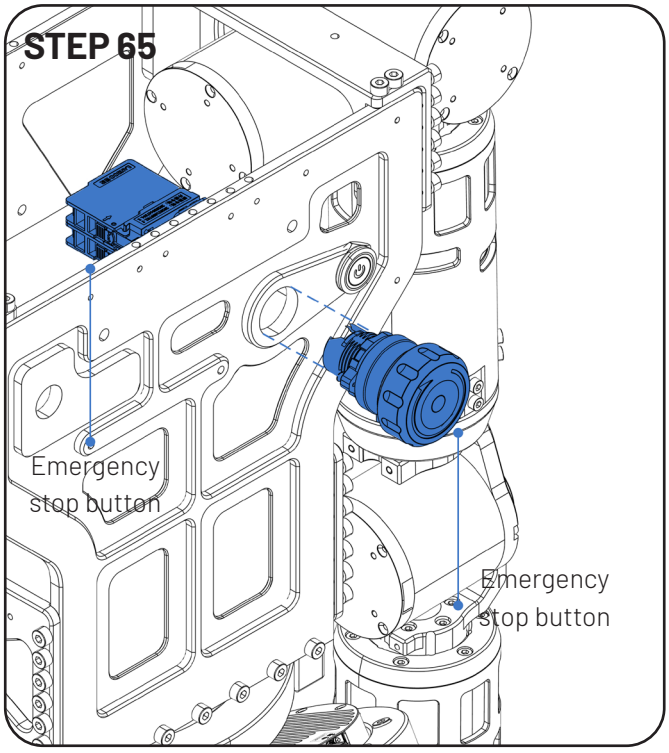

65 The emergency stop button needs to be tightened, and the internal circuit board needs to be secured using clips on the back of the robot.

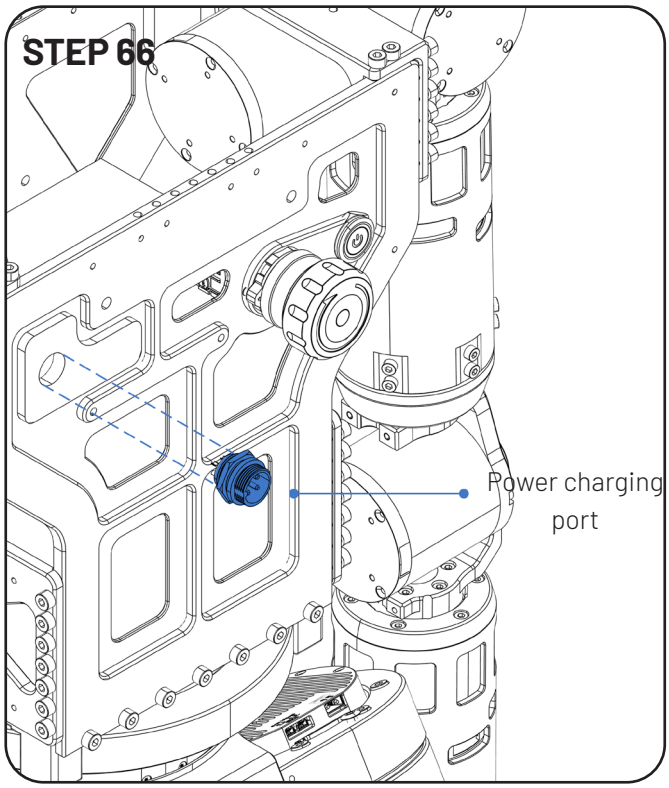

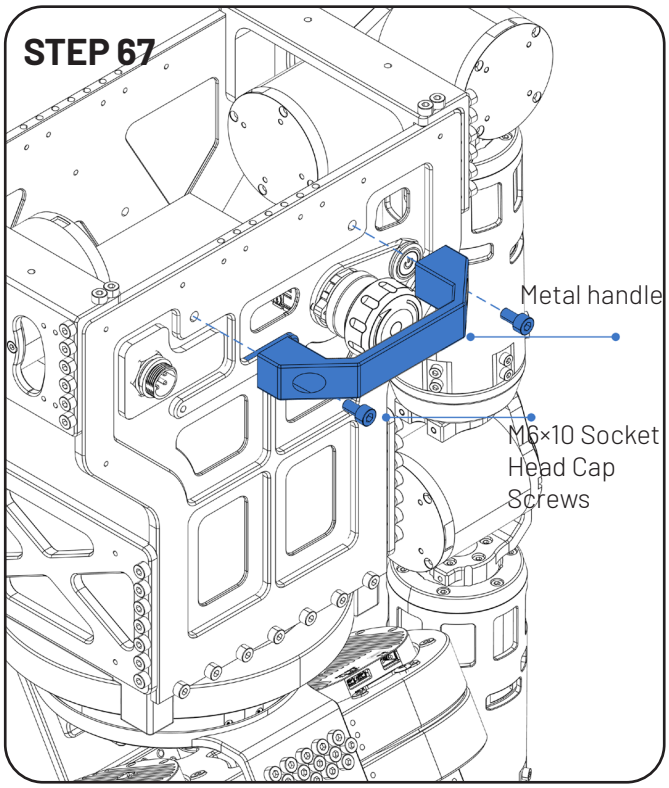

2.2 Installation Steps

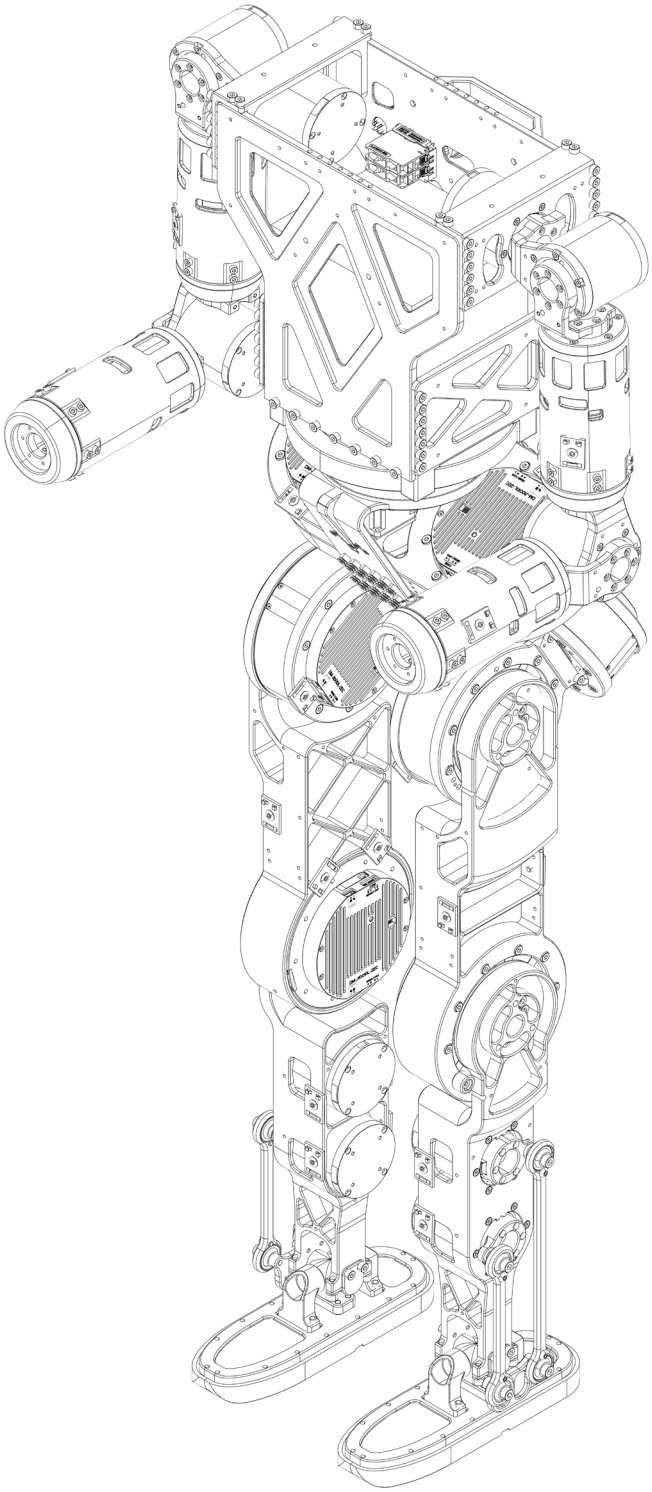

Installation Completed Effect Diagram

2.3 Cylindrical Pin Calibration Plan for RoboParty Roboto Origin

I. Purpose of Calibration Using Cylindrical Pins

We realized that the calibration methods for 3D printing in the past had many deficiencies, such as factors like the accuracy and stiffness of 3D printed parts, as well as the time required to print calibration parts. Therefore, we proposed using cylindrical pins (GB119) to constrain the rotational degrees of freedom of each joint. The standard part calibration scheme aims to provide users with an alternative mechanical calibration method with high repeatability to achieve attitude constraint and zero alignment of each joint of the robot during the calibration process.

II. Potential issues in cylindrical pin calibration

It should be noted that this type of calibration method has relatively high requirements for the manufacturing tolerances of components, including but not limited to dimensional errors, positional errors, and shape errors. Due to the process differences between different machining suppliers and different machining batches, even when the nominal dimensions are consistent, the actual fitting effects of parts may vary. Therefore, during actual use, it may occur that the cylindrical locating pin cannot be smoothly inserted, or although it can be inserted, it cannot be fully inserted to the designed depth, thus affecting its effect on restricting the rotational degrees of freedom of the joint. If the locating pin cannot be inserted manually, you may choose to use a rubber hammer or other tools to insert it.

In some cases, inserting the cylindrical pin to a certain depth can effectively constrain the rotation of the joint. After inserting the positioning pin, if the rotation degree of freedom of the relevant joint is found to be restricted when rotating it, the calibration and positioning can be considered completed, and there is no need to force it to be

inserted to the theoretical limit position. The BOM provides two lengths of positioning pins, 18 and 22. Due to interference at some positions, users can choose cylindrical pins of different lengths by themselves.
If the plug is found difficult to pull out manually, tools such as needle-nose pliers can be used.

III. Installation Location Instructions

The insertion positions of the locating pins for the arm and leg are as shown in the figure (taking the right hand and right leg as an example). It should be noted that the illustrated scheme imposes a certain degree of over-constraint on the rotational degrees of freedom of the leg. From a theoretical analysis perspective, only one locating pin needs to be inserted into the leg joint to achieve posture positioning. However, in actual engineering implementation, a multi-point constraint design scheme is adopted to improve the stability and reliability of the calibration process.

2.3 Cylindrical Pin Calibration Plan for RoboParty Roboto Origin

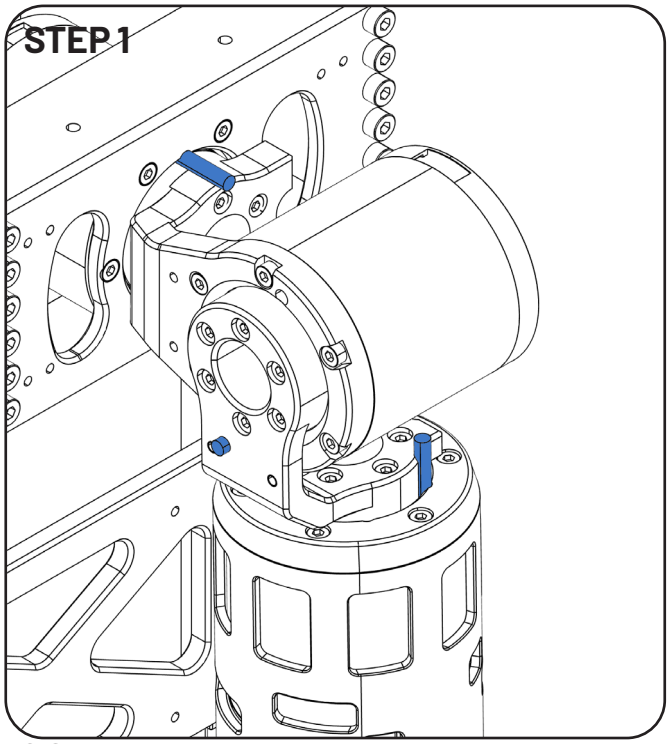

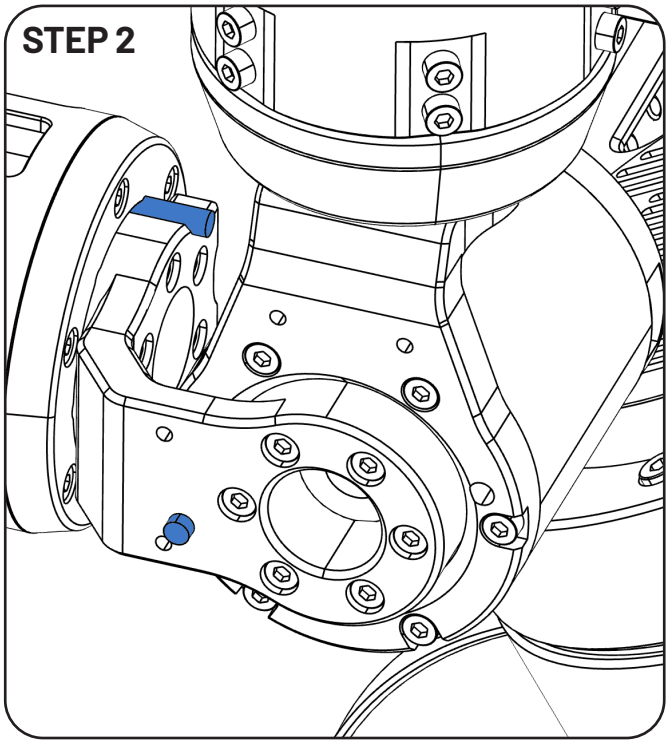

1&2 The limit pins used for the two-step installation are both size M4×18. The insertion position of the arm's locating pin is as shown in the figure (using the right arm as an example).

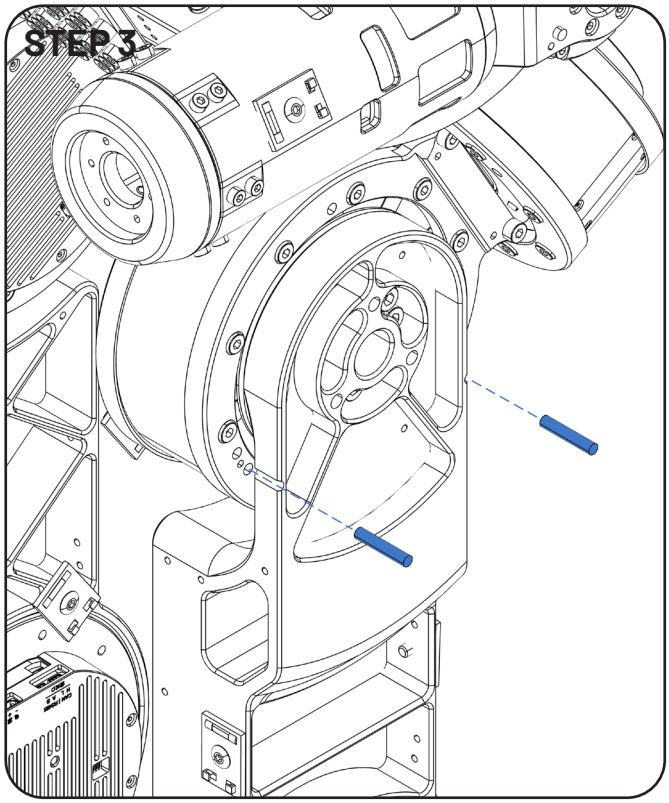

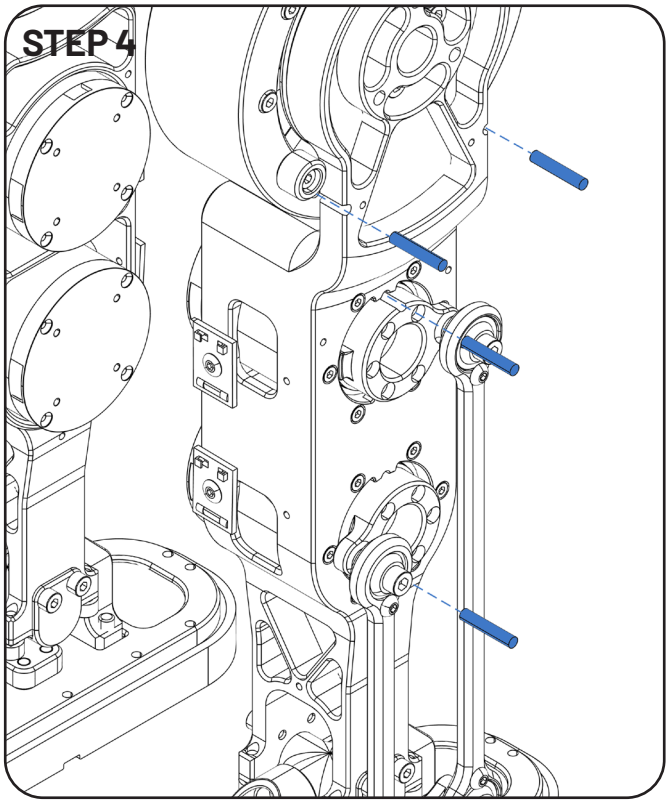

3&4 The limit pins used for the two-step installation are both size M4×22. The insertion position of the leg's locating pin is as shown in the figure (using the right leg as an example).

2.3 Cylindrical Pin Calibration Plan for RoboParty Roboto Origin

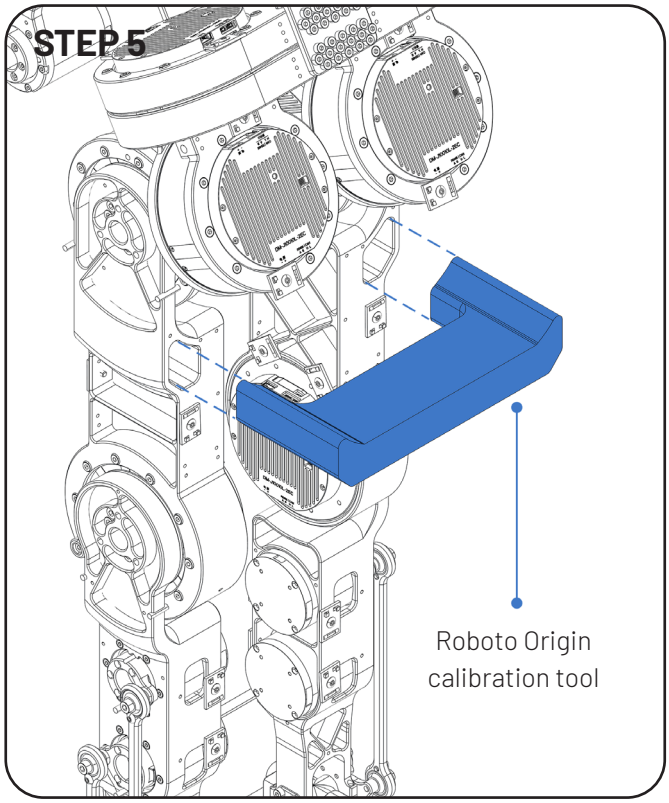

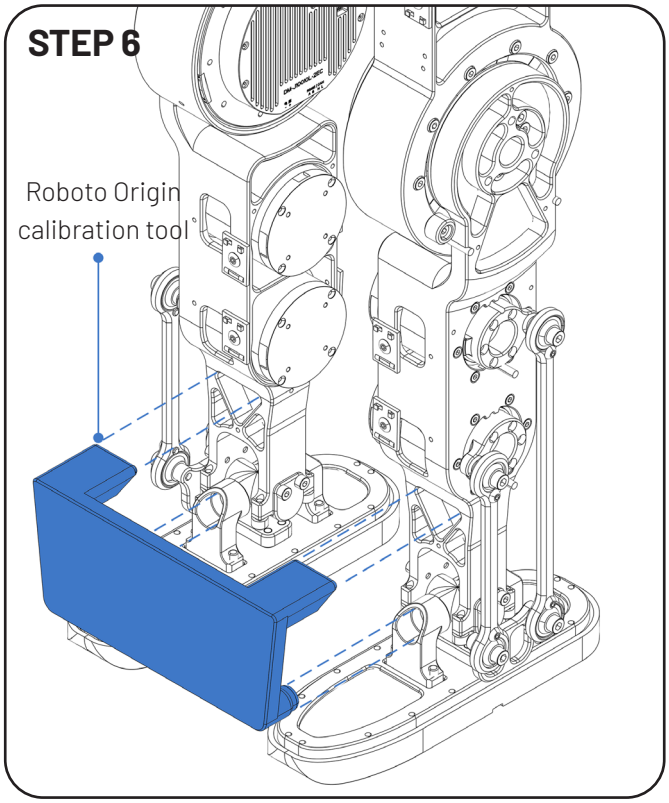

The limit and positioning of the lumbar joint are achieved jointly by the limit blocks on the "lumbar support structure" and the "battery bottom cover" . If the assembly position is correct, the upper body will come into contact with the limit structure when rotating approximately ±120° in the clockwise or counterclockwise direction, thereby achieving the angular positioning of the lumbar joint.

2.3 Cylindrical Pin Calibration Plan for RoboParty Roboto Origin

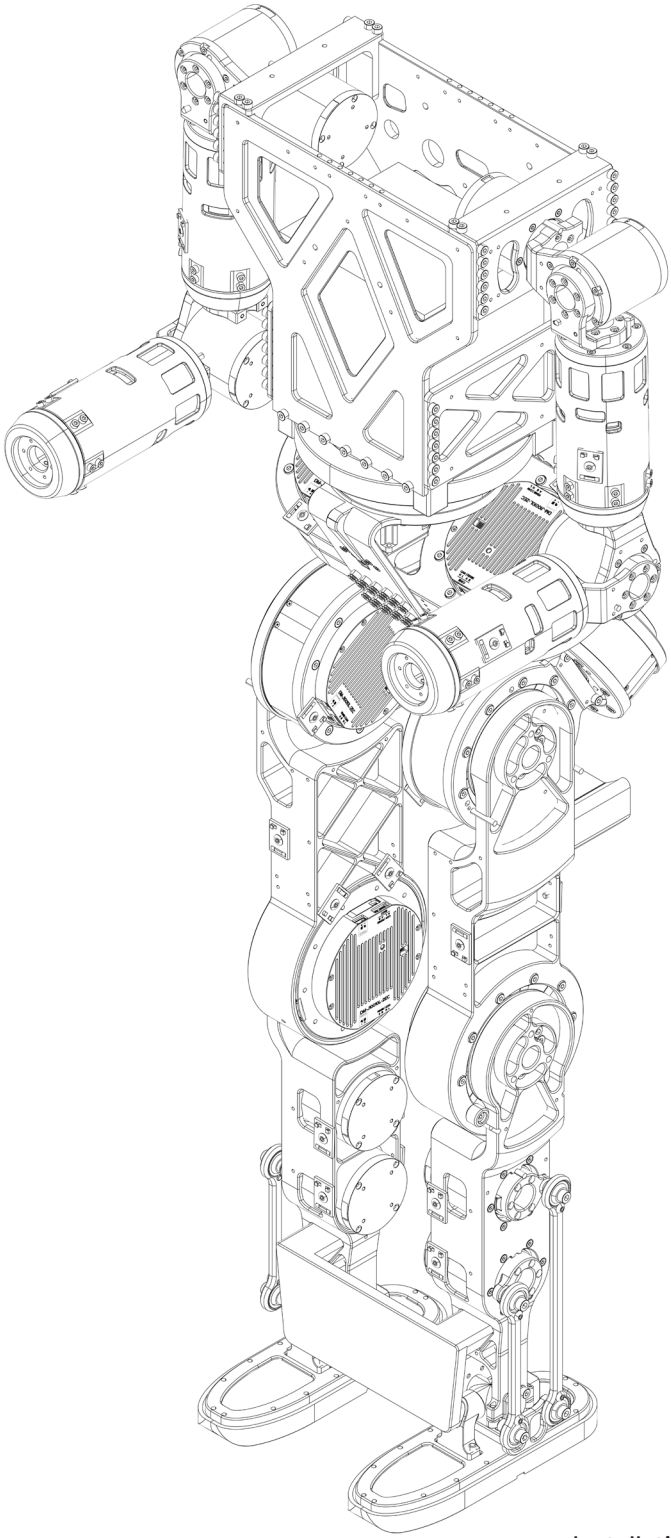

Installation Completed Effect Diagram

ROBO PARTY

小红书 抖音 Bilibili

roboparty.com

+86 192 5270 4182

Pre&after-sales: sales@roboparty.com
Ecological Management: support@roboparty.com
Technical Support: tech@roboparty.com